VERDANA

ENVIRONMENTAL RESOURCE PERMIT PLANS

PART OF SECTIONS 29, 31 & 32, TOWNSHIP 46 SOUTH, RANGE 27 EAST
LEE COUNTY, FLORIDA

PROJECT INFORMATION

PARCEL ID	29-46-27-00-00001.0000, 32-46-27-00-00001.1000, 31-46-27-00-00001.1000

CONSULTANTS

ENGINEER
DELISI FITZGERALD INC
1605 HENDRY ST.
FORT MYERS, FL 33901
(239) 418-0691

ENVIRONMENTAL
PASSARELLA AND ASSOCIATES INC.
13620 METROPOLIS AVE., SUITE 200
FORT MYERS, FL 33912
(239) 274-0067

SURVEY
BARRACO AND ASSOCIATES INC.
2271 McGREGOR BLVD., SUITE 100
FORT MYERS, FL 33901
(239) 461-3170

UTILITY PROVIDERS

WATER & SEWER
LEE COUNTY UT LITIES
1500 MONROE STREET
FORT MYERS, FL 33901
(239) 533-8160

ELECTRIC
FLORIDA POWER AND LIGHT
2425 THOMPSON ST.
FORT MYERS, FL 33901
(239) 332-9154

TELEPHONE
CENTURYLINK
2820 CARGO ST.
FORT MYERS, FL 33902
(239) 336-2008

CABLE
COMCAST CABLE
12641 CORPORATE LAKES DR.
FORT MYERS, FL 33913
(239) 432-1805

GAS
TECO GAS
5901 ENTERPRISE PKWY.
FORT MYERS, FL 33905
(239) 690-5513

SOLID WASTE DISPOSAL
WASTE PRO
13110 RICKENBACKER PKWY.
FORT MYERS, FL 33913
(239) 337-0800

FIRE DISTRICT
ESTERO FIRE DISTRICT
21500 THREE OAKS PKWY.
ESTERO, FL 33928
(239) 390-8000

VICINITY MAP

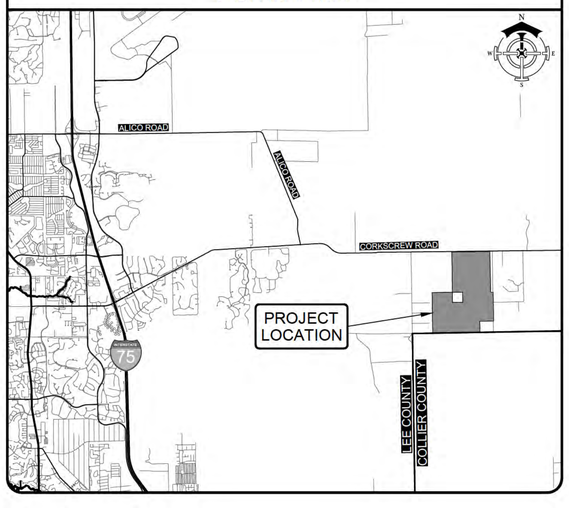

SHEET INDEX

NO.	DESCRIPTION
1	COVER SHEET, VICINITY MAP AND NDEX
2	AERIAL PHOTOGRAPH AND EXISTING CONDITIONS
3	MASTER DRAINAGE PLAN
4-22	DETAILED DRA NAGE PLANS
23-24	TYPICAL SECTIONS
25	DETAILS
26-27	CONTROL STRUCTURE DETAILS
28	EROSION CONTROL PLAN

CONSTRUCTION INFORMATION

Always call 811 two full business days before you dig
Sunshine811.com
CALL BEFORE YOU DIG: 811

DELISI FITZGERALD, INC.
Planning - Engineering - Project Management
1605 Hendry Street
Fort Myers, FL 33901
239-418-0691 • 239-418-0692 fax
Florida Certificate of Authorization:
Engineering LB #: 26978

ENGINEER OF RECORD:
ANDREW D. FITZGERALD, P.E. (FOR THE FIRM)
FLORIDA P.E. NO. 56776

NOT VALID WITHOUT SEAL, SIGNATURE AND DATE

OWNER / DEVELOPER:
PAN TERRA HOLDINGS, LTD
150 ALHAMBRA CIRCLE #925
CORAL GABLES, FL 33134

PROJECT:
VERDANA

PLAN REVISIONS

#	DATE	DESCRIPTION

COVER SHEET, VICINITY MAP AND INDEX

Project Manager:	ADF
Drawn By:	CAS
Checked By:	ADF
Project Number:	21375
Part of Section(s):	29,31,32
Township: 46 S	Range: 27 E
County, State:	LEE COUNTY, FL

Status:
FOR PERMITTING PURPOSES ONLY
NOT FOR CONSTRUCTION

Sheet Number: 1

K:\21375 - CORKSCREW GROVE\SERP\PLAN SET\21375-01-COVER.DWG
9/29/2016 4:26 PM

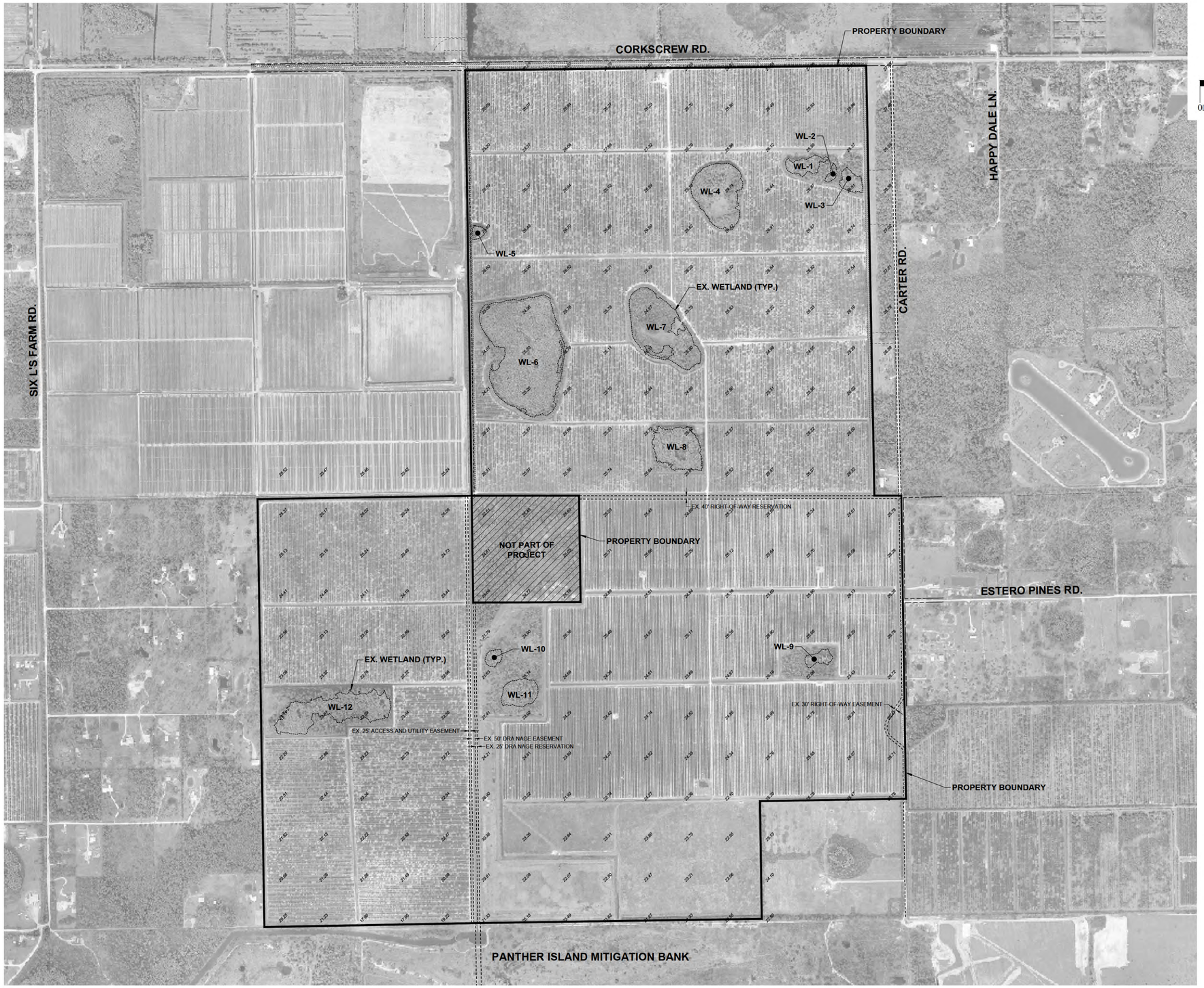

PROJECT DATUM
NAVD 88

K:\21375 - CORKSCREW GROVES\ERP\PLAN SET\21375-02-AERIAL.DWG
9/29/2016 4:27 PM

DeLisi Fitzgerald, Inc.
Planning - Engineering - Project Management
1605 Hendry Street
Fort Myers, FL 33901
239-418-0691 • 239-418-0692 fax
Florida Certificate of Authorization:
Engineering LB #: 26978

ENGINEER OF RECORD:
ANDREW D. FITZGERALD, P.E (FOR THE FIRM)
FLORIDA P.E. NO. 56776

NOT VALID WITHOUT SEAL, SIGNATURE AND DATE

OWNER / DEVELOPER:
PAN TERRA HOLDINGS, LTD
150 ALHAMBRA CIRCLE, #925
CORAL GABLES, FL 33134

PROJECT:
VERDANA

PLAN REVISIONS

#	DATE	DESCRIPTION

AERIAL PHOTOGRAPH AND EXISTING CONDITIONS

Project Manager:	ADF
Drawn By:	CAS
Checked By:	ADF
Project Number:	21375
Part of Section(s):	29,31,32
Township: 46 S	Range: 27 E
County, State:	LEE COUNTY, FL

Status:
FOR PERMITTING PURPOSES ONLY
NOT FOR CONSTRUCTION

Sheet Number: 2

GENERAL DRAINAGE NOTES:

1. THE LENGTH OF ALL STORM DRA N PIPES SHOWN ARE APPROXIMATE AND ARE MEASURED FROM THE INSIDE FACE OF STRUCTURE TO THE INSIDE FACE OF THE NEXT STRUCTURE.
2. EXISTING OFF-SITE DRA NAGE PATTERNS SHALL BE MAINTAINED DURING THE COURSE OF CONSTRUCTION.
3. THE LOCATION OF THE DRAINAGE STRUCTURES SHOWN ON THE PLANS MAY BE F ELD ADJUSTED TO PRESERVE ANY EXISTING VEGETATION, AS APPROVED BY THE ENGINEER.
4. DURING CONSTRUCTION, ALL NLET OPEN NGS SHALL BE COVERED WITH F LTER FABRIC (MIRAFI 140N, OR APPROVED EQUAL) TO PREVENT DEBRIS FROM FALLING NTO THE NLET.
5. THE CONTRACTOR SHALL ADJUST ALL PROPOSED ELEVATIONS TO MEET THE EXISTING GRADES AS NEEDED.
6. ALL STORM DRAINAGE PIPE SHALL BE RE NFORCED CONCRETE PIPE (RCP), UNLESS OTHERWISE NOTED.
7. PROPOSED GRADES IN OPEN SPACE AREAS ARE TOP OF SOD.
8. THE SUBJECT PARCEL IS LOCATED IN FLOOD ZONE 'X' BASED ON FLOOD NSURANCE RATE COMMUNITY PANEL 12071C0625F, AUGUST 28, 2008. THERE IS NO SPECIAL FLOOD HAZARD ELEVAT ON ASSOCIATED WITH THIS ZONE.
9. THERE ARE NO KNOWN IMPACTS TO SURFACE GROUND WATER RESULT NG FROM THE PROJECT.

LAND USE SUMMARY

CATEGORY	BAS N 1	BAS N 2	BAS N 3	BAS N 4	BAS N 5	BAS N 6	BAS N 7	BAS N 8
LAKE	21.93 AC.	11.51 AC.	14.29 AC.	13.56 AC.	29.30 AC.	32.85 AC.	41.94 AC.	40.02 AC.
RESIDENTIAL								
PAVEMENT	10.73 AC.	6.93 AC.	8.06 AC.	9.02 AC.	13.48 AC.	12.16 AC.	7.42 AC.	10.58 AC.
BUILDING	13.40 AC.	17.34 AC.	12.62 AC.	18.14 AC.	20.40 AC.	29.71 AC.	21.45 AC.	22.82 AC.
PERVIOUS	32.35 AC.	34.90 AC.	31.23 AC.	33.06 AC.	57.71 AC.	56.02 AC.	48.55 AC.	57.35 AC.
COMMERCIAL / AMENITY (1)								
PAVEMENT	2.97 AC.	—	—	5.77 AC.	—	2.56 AC.	—	—
BUILDING	1.78 AC.	—	—	3.46 AC.	—	1.53 AC.	—	—
PERVIOUS	1.17 AC.	—	—	2.31 AC.	—	1.02 AC.	—	—
TOTAL	84.33 AC.	70.68 AC.	66.20 AC.	85.32 AC.	120.89 AC.	135.85 AC.	119.36 AC.	130.77 AC.

(1) ASSUMED PERCENTAGES OF CONCEPTUAL COMMERCIAL / AMENITY AREAS: PAVEMENT = 50%, BUILDING = 30%, PERVIOUS = 20%.

OVERALL LAND USE SUMMARY

CATEGORY	AREA	PERCENTAGE
LAKE	205.40 AC.	14%
PAVEMENT	89 68 AC.	6%
BUILD NG	162 65 AC.	11%
PERVIOUS	355 67 AC.	25%
OUTS DE OF WATER MANAGEMENT AREA	647 38 AC.	44%
TOTAL	1,460.78 AC.	100%

SURFACE WATER MANAGEMENT PARAMETERS

	BASIN 1	BASIN 2	BASIN 3	BASIN 4	BAS N 5	BASIN 6	BASIN 7	BAS N 8
CONTROL ELEVATION (FT-NAVD)	26.50	26 50	26.50	26.00	25 00	24 00	22.50	23.50
5-YEAR, 1 DAY STORM EVENT PEAK STAGE (FT-NAVD)	27.63	28 03	27.78	27.63	26 20	25.19	23.38	24.47
25-YEAR, 3 DAY STORM EVENT PEAK STAGE (FT-NAVD)	28.52	29 00	28.72	28.59	27.12	26.14	24.15	25.30
100-YEAR, 3 DAY STORM EVENT PEAK STAGE (FT-NAVD)	29 06	29.47	29.24	29.04	27 63	26 68	24 69	25.86
MINIMUM ROAD ELEVATION (FT-NAVD)	28.50	28 50	28.50	28.25	27 00	26 00	24.50	25.50
MINIMUM BERM ELEVATION (FT-NAVD)	29.00	29 50	29 00	29.00	27.75	26 50	24.75	25.75
MINIMUM F NISHED FLOOR ELEVATION (FT-NAVD)	29.50	29 50	29.75	29.00	28 00	27 00	25.50	26.50

LEGEND

- WETLANDS TO BE PRESERVED
- UPLANDS TO BE PRESERVED
- WETLANDS TO BE MPACTED
- FUTURE DEVELOPMENT
- BASIN BOUNDARY

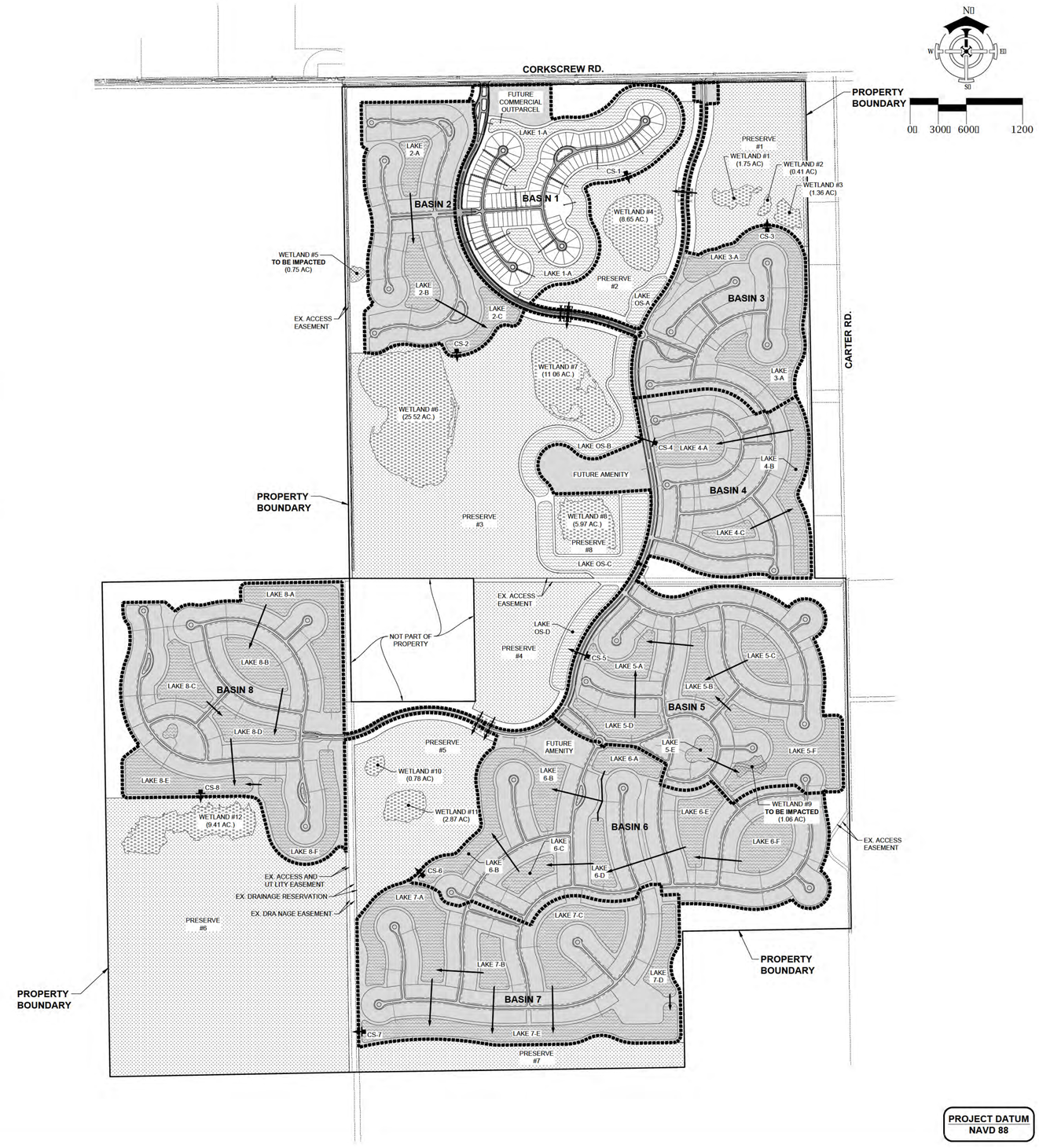

PROJECT DATUM NAVD 88

DELISI FITZGERALD, INC.
Planning - Engineering - Project Management
1605 Hendry Street
Fort Myers, FL 33901
239-418-0691 • 239-418-0692 fax
Florida Certificate of Authorization: Engineering LB #: 26978

ENGINEER OF RECORD:
ANDREW D. FITZGERALD, P.E. (FOR THE FIRM)
FLORIDA P.E. NO.: 56776

NOT VALID WITHOUT SEAL, SIGNATURE AND DATE

OWNER / DEVELOPER:
PAN TERRA HOLDINGS, LTD
150 ALHAMBRA CIRCLE #925
CORAL GABLES, FL 33134

PROJECT:
VERDANA

PLAN REVISIONS

#	DATE	DESCRIPTION

MASTER DRAINAGE PLAN

Project Manager:	ADF
Drawn By:	CAS
Checked By:	ADF
Project Number:	21375
Part of Section(s):	29,31,32
Township: 46 S	Range: 27 E
County, State:	LEE COUNTY, FL

Status:
FOR PERMITTING PURPOSES ONLY
NOT FOR CONSTRUCTION

Sheet Number: 3

K:\21375 - CORKSCREW GROVES\SER\PPLAN SET\21375-03-MDP.DWG
9/29/2016 4:28 PM

DRAINAGE STRUCTURE TABLE

S1-1 TYPE 'S' NLET - FDOT #200, 214 E.O.P. ELEV. = **28.50** NV. E (15") = **25.00**	**S1-4** JUNCTION BOX (C) - FDOT #201, 232 TOP ELEV. = **29.00** INV. N (15") = **25.00** INV. E (24") = **24.00** INV. S (18") = **24.50**	**S1-7** TYPE 'S' INLET - FDOT #200, 214 E.O.P. ELEV. = **28.50** INV. W (15") = **25.00** INV. N (18") = **24.50**
S1-2 TYPE 'S' NLET - FDOT #200, 214 E.O.P. ELEV. = **28.50** NV. W (15") = **25.00** NV. S (15") = **25.00**	**S1-5** 24" FLARED END - FDOT #270 INV. (24") = **21.00**	**S1-10** TYPE 'C' INLET - FDOT #232 GRATE ELEV. = **27.50** INV. SE (15") = **24.00**
S1-3 JUNCTION BOX (C) - FDOT #201, 232 TOP ELEV. = **28.50** NV. N (15") = **25.00** NV. S (15") = **25.00**	**S1-6** TYPE 'S' NLET - FDOT #200, 214 E.O.P. ELEV. = **28.50** INV. E (15") = **25.00**	**S1-11** VALLEY GUTTER NLET - SEE DETAIL E.O.P. ELEV. = **28.50** INV. NW (15") = **24.00** INV. E (18") = **24.00**

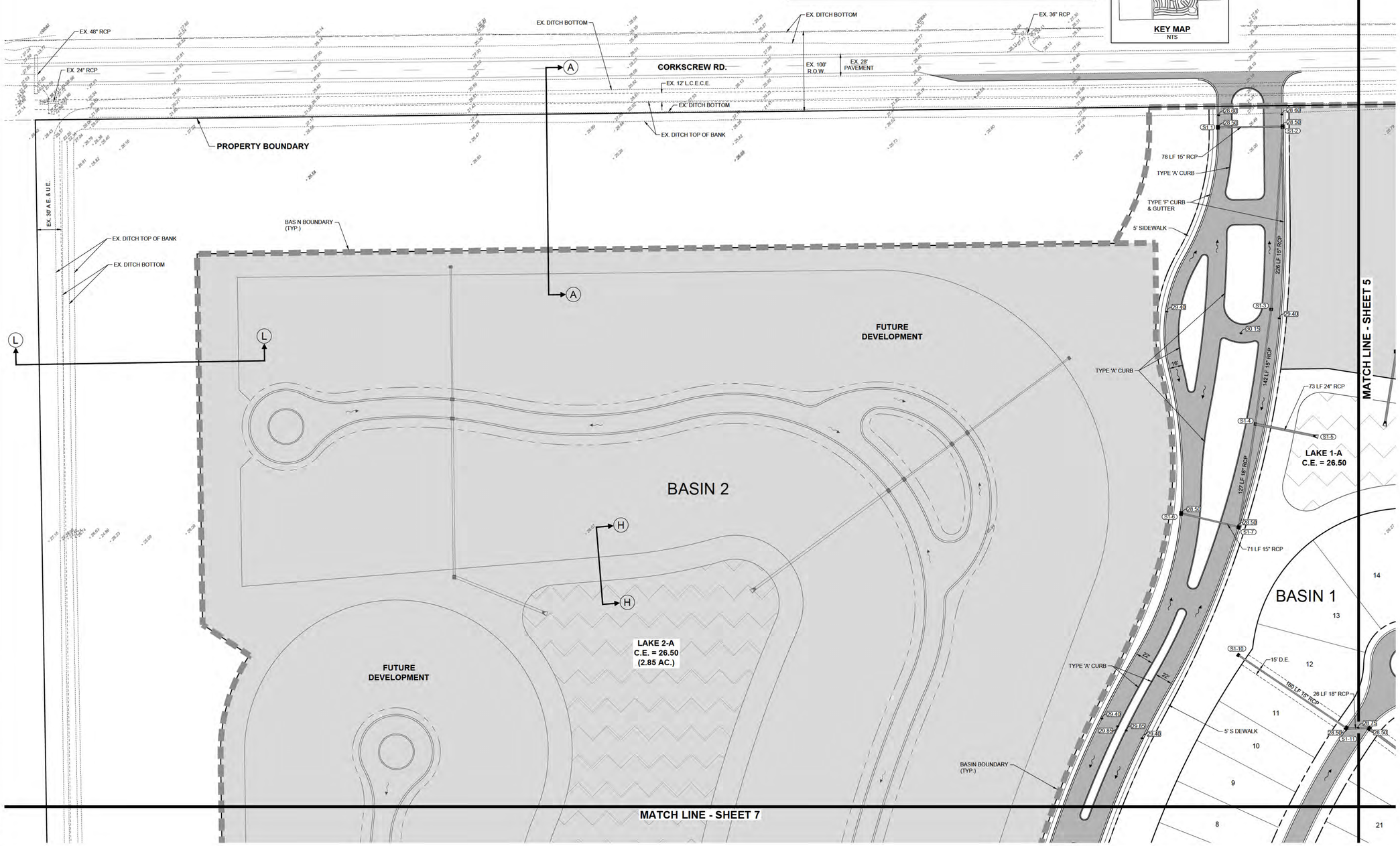

K:\21375 - CORKSCREW GROVE\SIE\BRP\PLAN SET\21375-04-DET-DRAIN-A.DWG
9/29/2016 4:29 PM

DELISI FITZGERALD, INC.
Planning - Engineering - Project Management
1605 Hendry Street
Fort Myers, FL 33901
239-418-0691 • 239-418-0692 fax
Florida Certificate of Authorization: Engineering LB # : 26978

ENGINEER OF RECORD:
ANDREW D. FITZGERALD, P.E (FOR THE FIRM)
FLORIDA P.E. NO. 56776

NOT VALID WITHOUT SEAL, SIGNATURE AND DATE

OWNER / DEVELOPER:
PAN TERRA HOLDINGS, LTD
150 ALHAMBRA CIRCLE #925
CORAL GABLES, FL 33134

PROJECT:
VERDANA

PLAN REVISIONS

#	DATE	DESCRIPTION

DETAILED DRAINAGE PLAN 'A'

Project Manager:	ADF
Drawn By:	CAS
Checked By:	ADF
Project Number:	21375
Part of Section(s):	29,31,32
Township: 46 S	Range: 27 E
County, State:	LEE COUNTY, FL

Status:
FOR PERMITTING PURPOSES ONLY
NOT FOR CONSTRUCTION

Sheet Number: 4

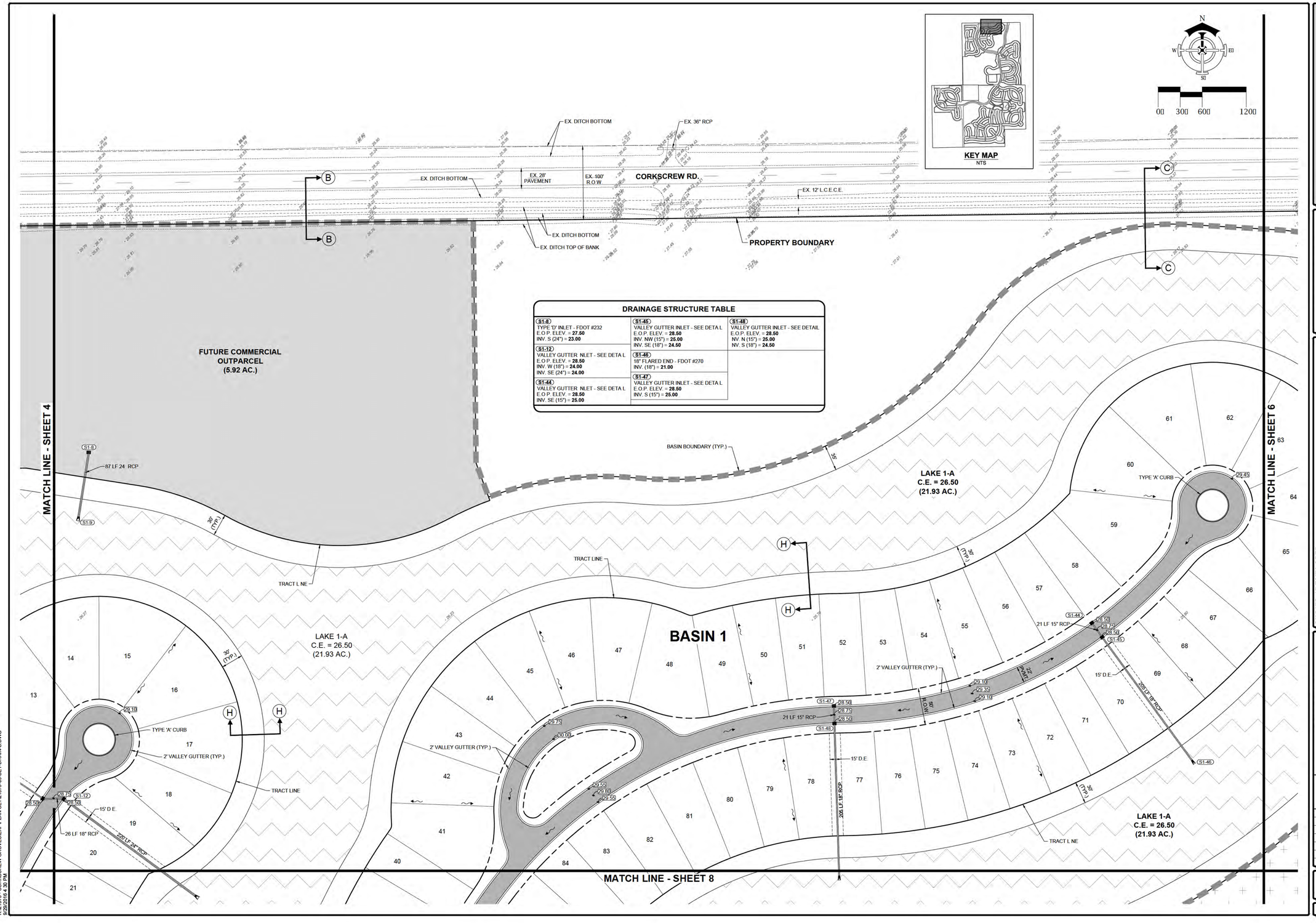

DRAINAGE STRUCTURE TABLE

S1-8 TYPE 'D' INLET - FDOT #232 E.O.P. ELEV. = **27.50** INV. S (24") = **23.00**	**S1-45** VALLEY GUTTER INLET - SEE DETA L E.O.P. ELEV. = **28.50** INV. NW (15") = **25.00** INV. SE (18") = **24.50**	**S1-48** VALLEY GUTTER INLET - SEE DETAIL E.O.P. ELEV. = **28.50** INV. N (15") = **25.00** INV. S (18") = **24.50**
S1-12 VALLEY GUTTER NLET - SEE DETA L E.O.P. ELEV. = **28.50** INV. W (18") = **24.00** INV. SE (24") = **24.00**	**S1-46** 18" FLARED END - FDOT #270 INV. (18") = **21.00**	
S1-44 VALLEY GUTTER NLET - SEE DETA L E.O.P. ELEV. = **28.50** INV. SE (15") = **25.00**	**S1-47** VALLEY GUTTER INLET - SEE DETA L E.O.P. ELEV. = **28.50** INV. S (15") = **25.00**	

K:\21375 - CORKSCREW GROVES\ERP\PLAN SET\21375-05-DET-DRAIN-B.DWG
9/29/2016 4:30 PM

DELISI FITZGERALD, INC.
Planning - Engineering - Project Management
1605 Hendry Street
Fort Myers, FL 33901
239-418-0691 • 239-418-0692 fax
Florida Certificate of Authorization:
Engineering LB #: 26978

ENGINEER OF RECORD:
ANDREW D. FITZGERALD, P.E. (FOR THE FIRM)
FLORIDA P.E. NO.: 56776

NOT VALID WITHOUT SEAL, SIGNATURE AND DATE

OWNER / DEVELOPER:
PAN TERRA HOLDINGS, LTD
150 ALHAMBRA CIRCLE, #925
CORAL GABLES, FL 33134

PROJECT:
VERDANA

PLAN REVISIONS

#	DATE	DESCRIPTION

DETAILED DRAINAGE PLAN 'B'

Project Manager:	ADF
Drawn By:	CAS
Checked By:	ADF
Project Number:	21375
Part of Section(s):	29,31,32
Township: 46 S	Range: 27 E
County, State:	LEE COUNTY, FL

Status:
FOR PERMITTING PURPOSES ONLY
NOT FOR CONSTRUCTION

Sheet Number: 5

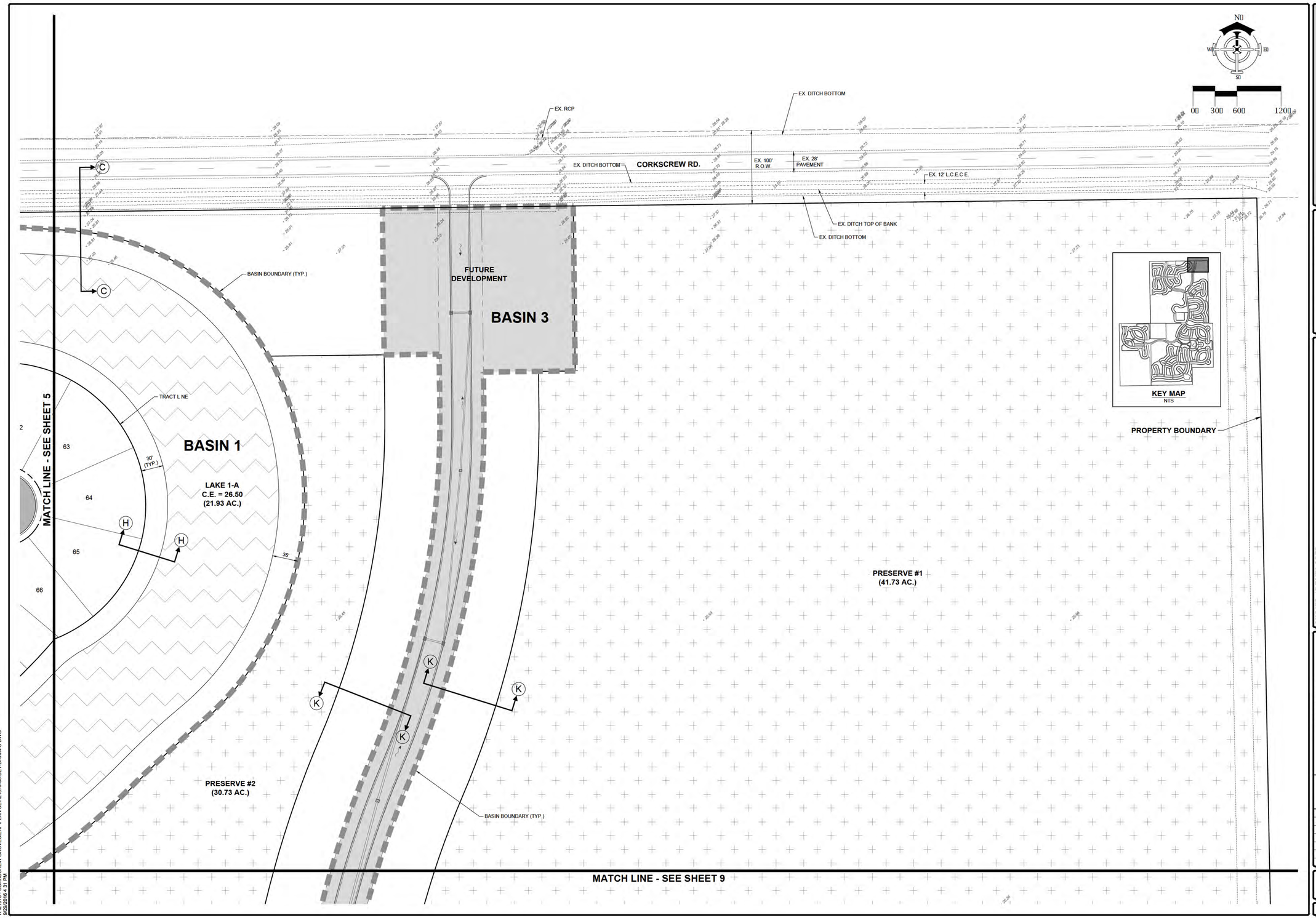

K:\21375 - CORKSCREW GROVE\SERP\PLAN SET\21375-06-DET-DRAIN-C.DWG
9/29/2016 4:31 PM

DeLisi Fitzgerald, Inc.
Planning - Engineering - Project Management
1605 Hendry Street
Fort Myers, FL 33901
239-418-0691 • 239-418-0692 fax
Florida Certificate of Authorization:
Engineering LB # 26978

ENGINEER OF RECORD:
ANDREW D. FITZGERALD, P.E. (FOR THE FIRM)
FLORIDA P.E. NO. 56776

NOT VALID WITHOUT SEAL, SIGNATURE AND DATE

OWNER / DEVELOPER:
PAN TERRA HOLDINGS, LTD
150 ALHAMBRA CIRCLE, #925
CORAL GABLES, FL 33134

PROJECT:
VERDANA

PLAN REVISIONS

#	DATE	DESCRIPTION

DETAILED DRAINAGE PLAN 'C'

Project Manager:	ADF
Drawn By:	CAS
Checked By:	ADF
Project Number:	21375
Part of Section(s):	29,31,32
Township: 46 S	Range: 27 E
County, State:	LEE COUNTY, FL

Status:
FOR PERMITTING PURPOSES ONLY
NOT FOR CONSTRUCTION

Sheet Number: 6

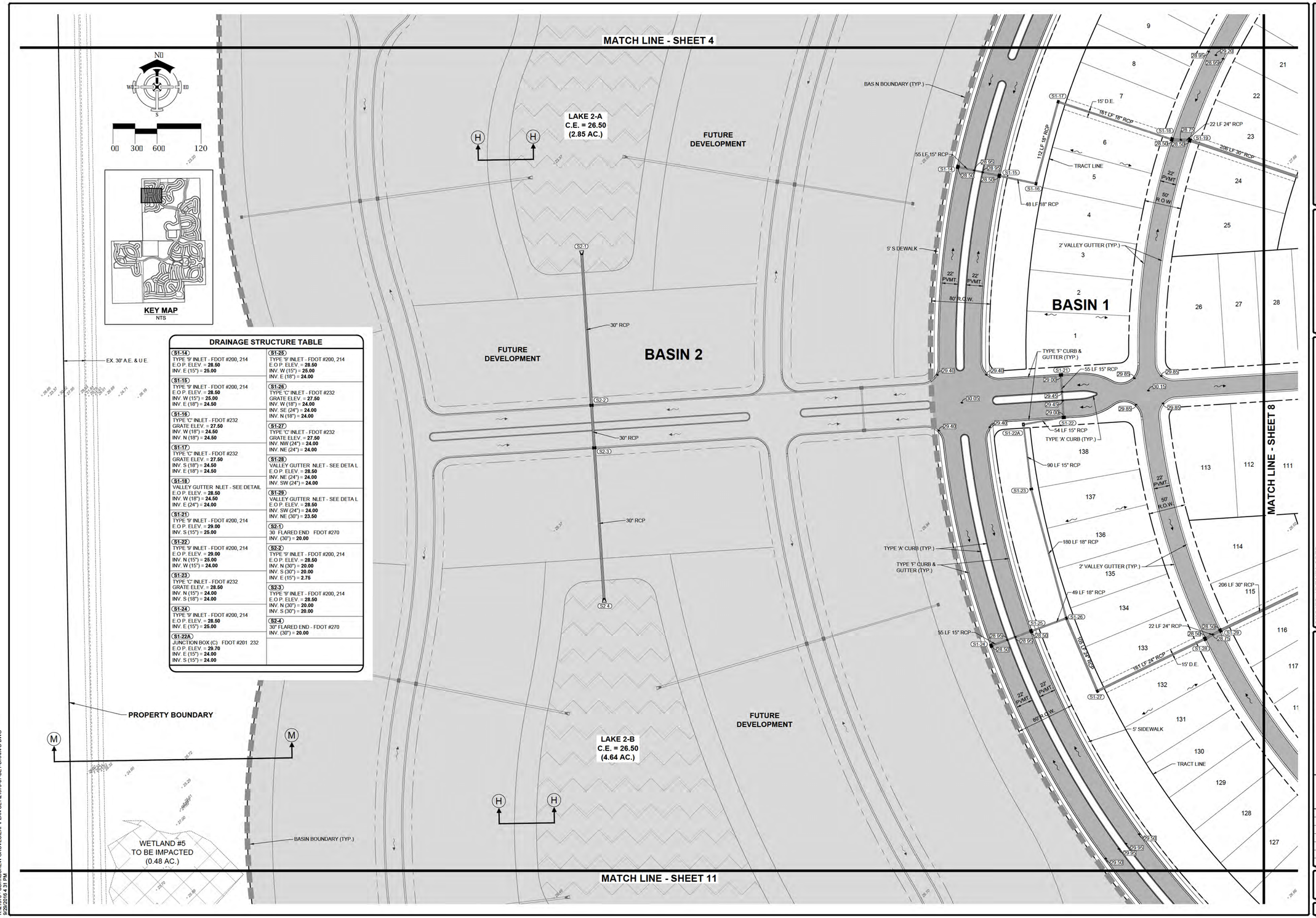

DRAINAGE STRUCTURE TABLE

S1-14 TYPE '9' INLET - FDOT #200, 214 E.O.P. ELEV. = **28.50** INV. E (15") = **25.00**	**S1-25** TYPE 'S' INLET - FDOT #200, 214 E.O.P. ELEV. = **28.50** INV. W (15") = **25.00** INV. E (18") = **24.00**
S1-15 TYPE 'S' INLET - FDOT #200, 214 E.O.P. ELEV. = **28.50** INV. W (15") = **25.00** INV. E (18") = **24.50**	**S1-26** TYPE 'C' INLET - FDOT #232 GRATE ELEV. = **27.50** INV. W (18") = **24.00** INV. SE (24") = **24.00** INV. N (18") = **24.00**
S1-16 TYPE 'C' INLET - FDOT #232 GRATE ELEV. = **27.50** INV. W (18") = **24.50** INV. N (18") = **24.50**	**S1-27** TYPE 'C' INLET - FDOT #232 GRATE ELEV. = **27.50** INV. NW (24") = **24.00** INV. NE (24") = **24.00**
S1-17 TYPE 'C' INLET - FDOT #232 GRATE ELEV. = **27.50** INV. S (18") = **24.50** INV. E (18") = **24.50**	**S1-28** VALLEY GUTTER NLET - SEE DETA L E.O.P. ELEV. = **28.50** INV. NE (24") = **24.00** INV. SW (24") = **24.00**
S1-18 VALLEY GUTTER NLET - SEE DETAIL E.O.P. ELEV. = **28.50** INV. W (18") = **24.50** INV. E (24") = **24.00**	**S1-29** VALLEY GUTTER NLET - SEE DETA L E.O.P. ELEV. = **28.50** INV. SW (24") = **24.00** INV. NE (30") = **23.50**
S1-21 TYPE 'S' INLET - FDOT #200, 214 E.O.P. ELEV. = **29.00** INV. S (15") = **25.00**	**S2-1** 30 FLARED END FDOT #270 INV. (30") = **20.00**
S1-22 TYPE 'S' INLET - FDOT #200, 214 E.O.P. ELEV. = **29.00** INV. N (15") = **25.00** INV. W (15") = **24.00**	**S2-2** TYPE 'S' INLET - FDOT #200, 214 E.O.P. ELEV. = **28.50** INV. N (30") = **20.00** INV. S (30") = **20.00** INV. E (15") = **2.75**
S1-23 TYPE 'C' INLET - FDOT #232 GRATE ELEV. = **28.50** INV. N (15") = **24.00** INV. S (18") = **24.00**	**S2-3** TYPE 'S' INLET - FDOT #200, 214 E.O.P. ELEV. = **28.50** INV. N (30") = **20.00** INV. S (30") = **20.00**
S1-24 TYPE 'S' INLET - FDOT #200, 214 E.O.P. ELEV. = **28.50** INV. E (15") = **25.00**	**S2-4** 30" FLARED END - FDOT #270 INV. (30") = **20.00**
S1-22A JUNCTION BOX (C) FDOT #201 232 E.O.P. ELEV. = **29.70** INV. E (15") = **24.00** INV. S (15") = **24.00**	

K:\21375 - CORKSCREW GROVE\SERP\PLAN SET\21375-07-DET-DRAIN-D.DWG
9/29/2016 4:31 PM

DELISI FITZGERALD, INC.
Planning - Engineering - Project Management
1605 Hendry Street
Fort Myers, FL 33901
239-418-0691 • 239-418-0692 fax
Florida Certificate of Authorization:
Engineering LB #: 26978

ENGINEER OF RECORD:
ANDREW D. FITZGERALD, P.E. (FOR THE FIRM)
FLORIDA P.E. NO. 56776

NOT VALID WITHOUT SEAL, SIGNATURE AND DATE

OWNER / DEVELOPER:
PAN TERRA HOLDINGS, LTD
150 ALHAMBRA CIRCLE, #925
CORAL GABLES, FL 33134

PROJECT:
VERDANA

PLAN REVISIONS

#	DATE	DESCRIPTION

DETAILED DRAINAGE PLAN 'D'

Project Manager:	ADF
Drawn By:	CAS
Checked By:	ADF
Project Number:	21375
Part of Section(s):	29,31,32
Township: 46 S	Range: 27 E
County, State:	LEE COUNTY, FL

Status:
FOR PERMITTING PURPOSES ONLY
NOT FOR CONSTRUCTION

Sheet Number: 7

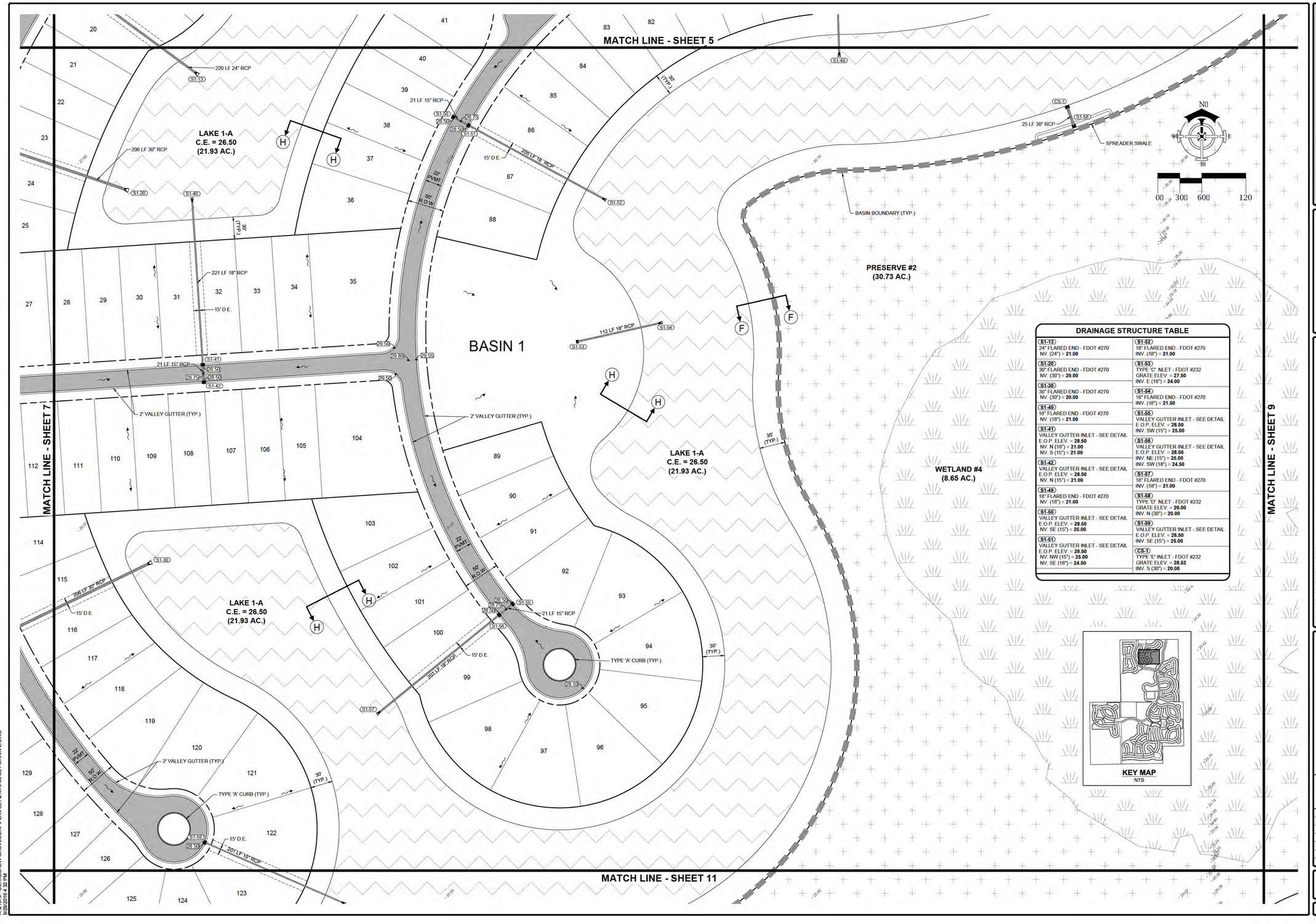

DRAINAGE STRUCTURE TABLE

S1-13 24" FLARED END - FDOT #270 INV. (24") = **21.00**	**S1-52** 18" FLARED END - FDOT #270 INV. (18") = **21.00**
S1-20 30" FLARED END - FDOT #270 INV. (30") = **20.00**	**S1-53** TYPE 'C' INLET - FDOT #232 GRATE ELEV. = **27.50** INV. E (18") = **24.00**
S1-30 30" FLARED END - FDOT #270 INV. (30") = **20.00**	**S1-54** 18" FLARED END - FDOT #270 INV. (18") = **21.50**
S1-40 18" FLARED END - FDOT #270 INV. (18") = **21.00**	**S1-55** VALLEY GUTTER INLET - SEE DETAIL E.O.P. ELEV. = **28.50** INV. SW (15") = **25.00**
S1-41 VALLEY GUTTER INLET - SEE DETAIL E.O.P. ELEV. = **28.50** INV. N (15") = **21.00** INV. S (15") = **21.00**	**S1-56** VALLEY GUTTER INLET - SEE DETAIL E.O.P. ELEV. = **28.50** INV. NE (15") = **25.00** INV. SW (18") = **24.50**
S1-42 VALLEY GUTTER INLET - SEE DETAIL E.O.P. ELEV. = **28.50** INV. N (15") = **21.00**	**S1-57** 18" FLARED END - FDOT #270 INV. (18") = **21.00**
S1-49 18" FLARED END - FDOT #270 INV. (18") = **21.00**	**S1-58** TYPE 'D' INLET - FDOT #232 GRATE ELEV. = **26.00** INV. N (30") = **20.00**
S1-50 VALLEY GUTTER INLET - SEE DETAIL E.O.P. ELEV. = **28.50** INV. SE (15") = **25.00**	**S1-59** VALLEY GUTTER INLET - SEE DETAIL E.O.P. ELEV. = **28.50** INV. SE (15") = **25.00**
S1-51 VALLEY GUTTER INLET - SEE DETAIL E.O.P. ELEV. = **28.50** INV. NW (15") = **25.00** INV. SE (18") = **24.50**	**CS-1** TYPE 'E' INLET - FDOT #232 GRATE ELEV. = **28.52** INV. S (30") = **20.00**

KEY MAP
NTS

DELISI FITZGERALD, INC.
Planning - Engineering - Project Management
1605 Hendry Street
Fort Myers, FL 33901
239-418-0691 • 239-418-0692 fax
Florida Certificate of Authorization:
Engineering LB #: 26978

ENGINEER OF RECORD:
ANDREW D. FITZGERALD, P.E (FOR THE FIRM)
FLORIDA P.E. NO. 56776

NOT VALID WITHOUT SEAL, SIGNATURE AND DATE

OWNER / DEVELOPER:
PAN TERRA HOLDINGS, LTD
150 ALHAMBRA CIRCLE, #925
CORAL GABLES, FL 33134

PROJECT:
VERDANA

PLAN REVISIONS

#	DATE	DESCRIPTION

DETAILED DRAINAGE PLAN 'E'

Project Manager:	ADF
Drawn By:	CAS
Checked By:	ADF
Project Number:	21375
Part of Section(s):	29,31,32
Township: 46 S	Range: 27 E
County, State:	LEE COUNTY, FL

Status:
FOR PERMITTING PURPOSES ONLY
NOT FOR CONSTRUCTION

Sheet Number: 8

K:\21375 - CQRK\SCREW GROVE\SER\PPLAN SET\21375-08-DET-DRAIN-E.DWG
9/29/2016 4:32 PM

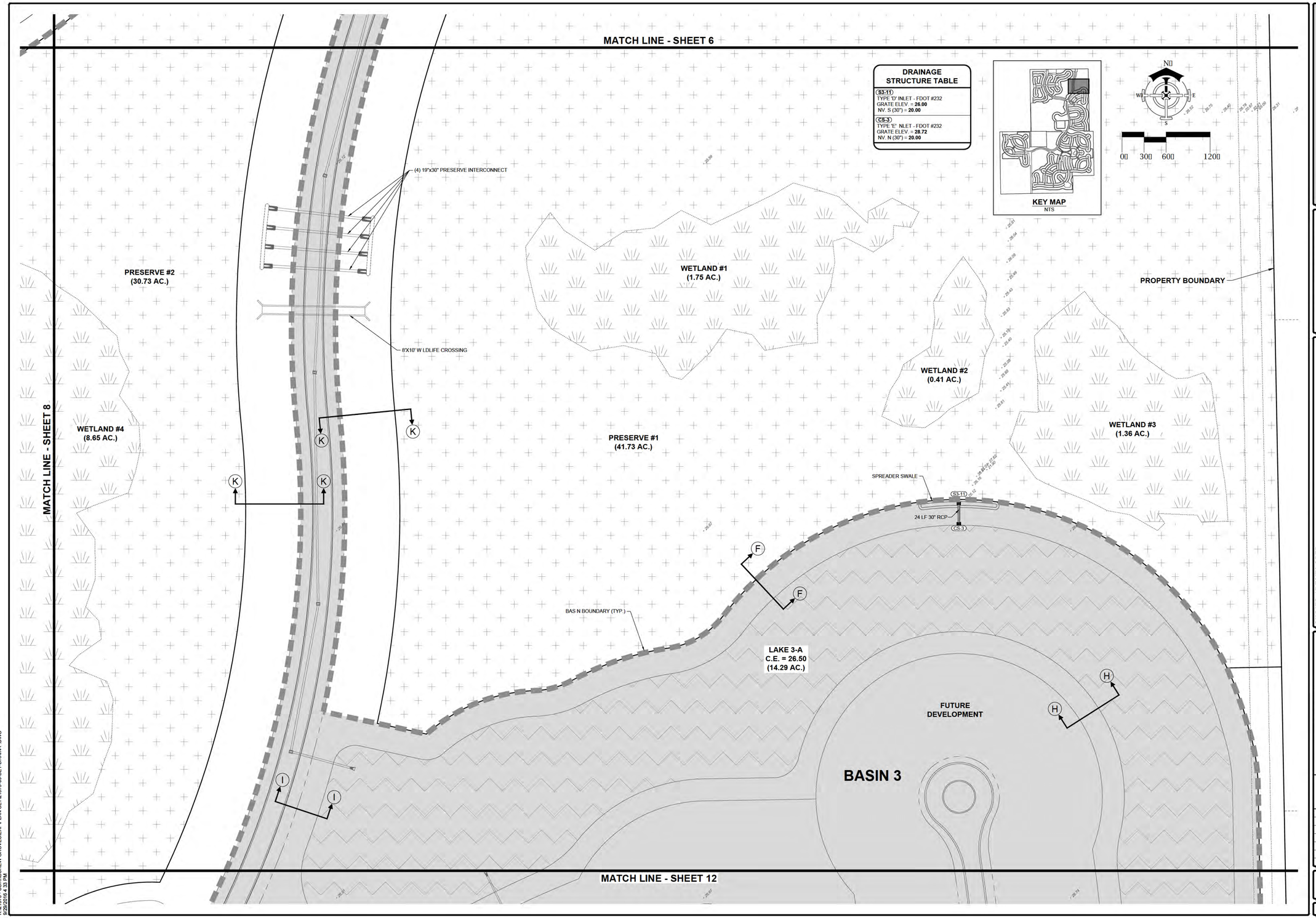

K:\21375 - CORKSCREW GROVE\SERP\PLAN SET\21375-08-DET-DRAIN-F.DWG
9/29/2016 4:33 PM

DELISI FITZGERALD, INC.
Planning - Engineering - Project Management
1605 Hendry Street
Fort Myers, FL 33901
239-418-0651 • 239-418-0692 fax
Florida Certificate of Authorization:
Engineering LB #: 26978

ENGINEER OF RECORD:
ANDREW D. FITZGERALD, P.E. (FOR THE FIRM)
FLORIDA P.E. NO. 56776

NOT VALID WITHOUT SEAL, SIGNATURE AND DATE

OWNER / DEVELOPER:
PAN TERRA HOLDINGS, LTD
150 ALHAMBRA CIRCLE, #925
CORAL GABLES, FL 33134

PROJECT:
VERDANA

PLAN REVISIONS

#	DATE	DESCRIPTION

DETAILED DRAINAGE PLAN 'F'

Project Manager:	ADF
Drawn By:	CAS
Checked By:	ADF
Project Number:	21375
Part of Section(s):	29,31,32
Township: 46 S	Range: 27 E
County, State:	LEE COUNTY, FL

Status:
FOR PERMITTING PURPOSES ONLY
NOT FOR CONSTRUCTION

Sheet Number: 9

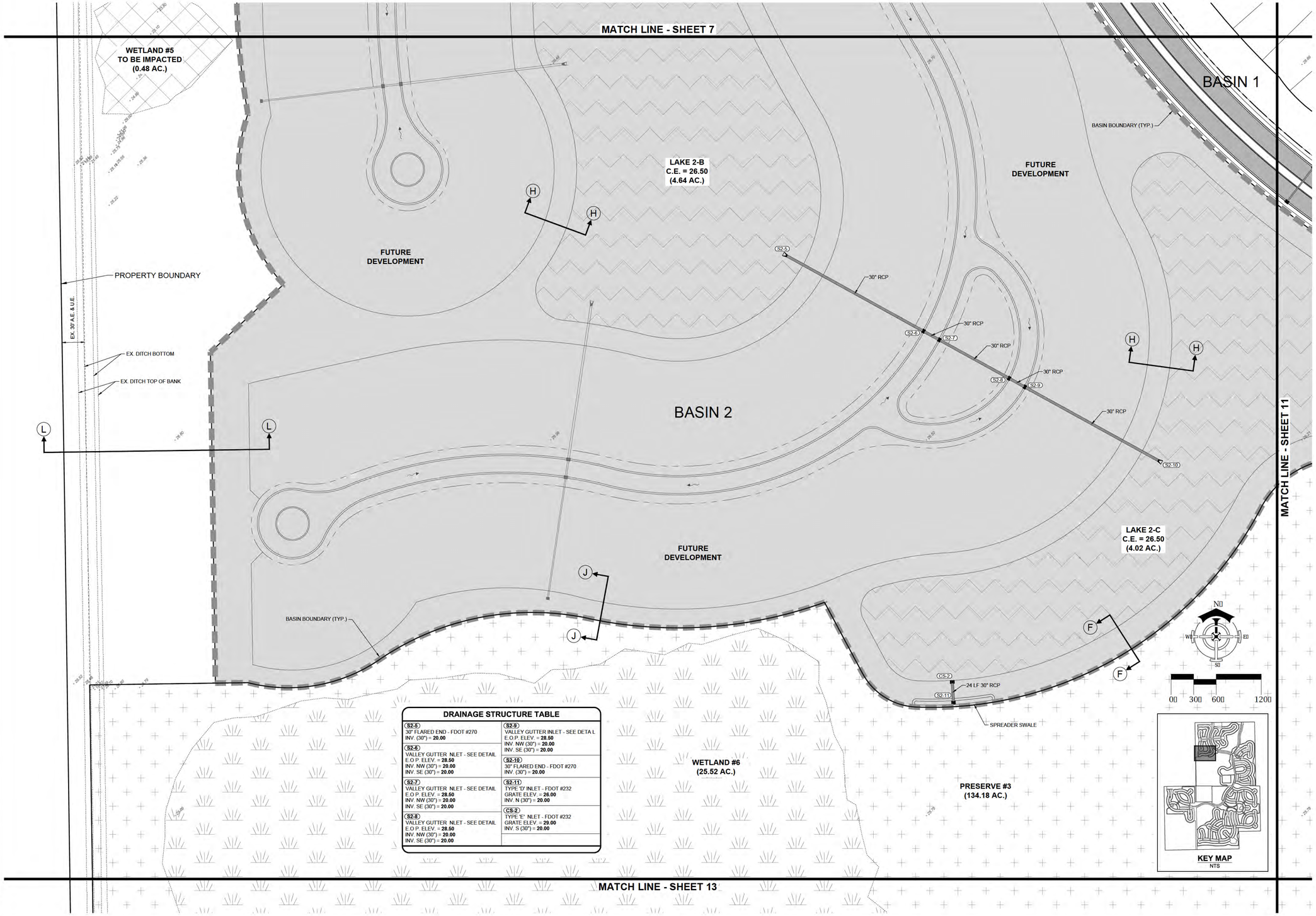

DRAINAGE STRUCTURE TABLE

S2-5 30" FLARED END - FDOT #270 INV. (30") = **20.00**	S2-9 VALLEY GUTTER INLET - SEE DETA L E.O.P. ELEV. = **28.50** INV. NW (30") = **20.00** INV. SE (30") = **20.00**
S2-6 VALLEY GUTTER NLET - SEE DETAIL E.O.P. ELEV. = **28.50** INV. NW (30") = **20.00** INV. SE (30") = **20.00**	S2-10 30" FLARED END - FDOT #270 INV. (30") = **20.00**
S2-7 VALLEY GUTTER NLET - SEE DETAIL E.O.P. ELEV. = **28.50** INV. NW (30") = **20.00** INV. SE (30") = **20.00**	S2-11 TYPE 'D' INLET - FDOT #232 GRATE ELEV. = **26.00** INV. N (30") = **20.00**
S2-8 VALLEY GUTTER NLET - SEE DETAIL E.O.P. ELEV. = **28.50** INV. NW (30") = **20.00** INV. SE (30") = **20.00**	CS-2 TYPE 'E' NLET - FDOT #232 GRATE ELEV. = **29.00** INV. S (30") = **20.00**

DELISI FITZGERALD, INC.
Planning - Engineering - Project Management
1605 Hendry Street
Fort Myers, FL 33901
239-418-0691 • 239-418-0692 fax
Florida Certificate of Authorization:
Engineering LB #: 26978

ENGINEER OF RECORD:
ANDREW D. FITZGERALD, P.E. (FOR THE FIRM)
FLORIDA P.E. NO. 56776

NOT VALID WITHOUT SEAL, SIGNATURE AND DATE

OWNER / DEVELOPER:
PAN TERRA HOLDINGS, LTD
150 ALHAMBRA CIRCLE, #925
CORAL GABLES, FL 33134

PROJECT:
VERDANA

PLAN REVISIONS

#	DATE	DESCRIPTION

DETAILED DRAINAGE PLAN 'G'

Project Manager:	ADF
Drawn By:	CAS
Checked By:	ADF
Project Number:	21375
Part of Section(s):	29,31,32
Township: 46 S	Range: 27 E
County, State:	LEE COUNTY, FL

Status:
FOR PERMITTING PURPOSES ONLY
NOT FOR CONSTRUCTION

Sheet Number: 10

K:\21375 - CORKSCREW GROVE\SERP\PLAN SET\21375-10-DET-DRAIN-G.DWG
9/29/2016 4:34 PM

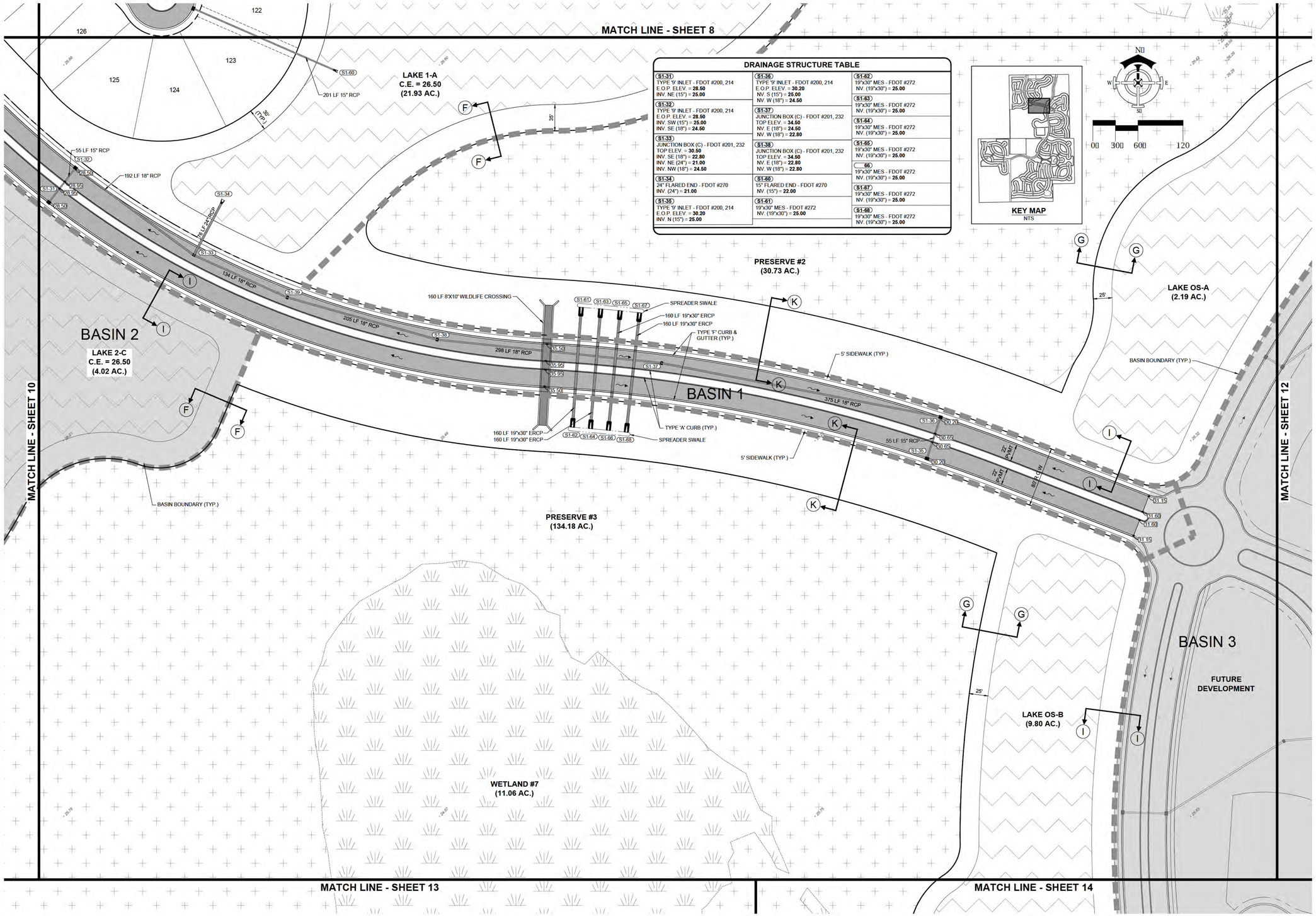

DRAINAGE STRUCTURE TABLE

S1-31 TYPE 'S' INLET - FDOT #200, 214 E.O.P. ELEV. = **28.50** INV. NE (15") = **25.00**	S1-36 TYPE 'S' INLET - FDOT #200, 214 E.O.P. ELEV. = **30.20** INV. S (15") = **25.00** INV. W (18") = **24.50**	S1-62 19"x30" MES - FDOT #272 INV. (19"x30") = **25.00**
S1-32 TYPE 'S' INLET - FDOT #200, 214 E.O.P. ELEV. = **28.50** INV. SW (15") = **25.00** INV. SE (18") = **24.50**	S1-37 JUNCTION BOX (C) - FDOT #201, 232 TOP ELEV. = **34.50** INV. E (18") = **24.50** INV. W (18") = **22.80**	S1-63 19"x30" MES - FDOT #272 INV. (19"x30") = **25.00**
S1-33 JUNCTION BOX (C) - FDOT #201, 232 TOP ELEV. = **30.50** INV. SE (18") = **22.80** INV. NE (24") = **21.00** INV. NW (18") = **24.50**	S1-38 JUNCTION BOX (C) - FDOT #201, 232 TOP ELEV. = **34.50** INV. E (18") = **22.80** INV. W (18") = **22.80**	S1-64 19"x30" MES - FDOT #272 INV. (19"x30") = **25.00**
S1-34 24" FLARED END - FDOT #270 INV. (24") = **21.00**	S1-60 15" FLARED END - FDOT #270 INV. (15") = **22.00**	S1-65 19"x30" MES - FDOT #272 INV. (19"x30") = **25.00**
S1-35 TYPE 'S' INLET - FDOT #200, 214 E.O.P. ELEV. = **30.20** INV. N (15") = **25.00**	S1-61 19"x30" MES - FDOT #272 INV. (19"x30") = **25.00**	66 19"x30" MES - FDOT #272 INV. (19"x30") = **25.00**
		S1-67 19"x30" MES - FDOT #272 INV. (19"x30") = **25.00**
		S1-68 19"x30" MES - FDOT #272 INV. (19"x30") = **25.00**

DELISI FITZGERALD, INC.
Planning - Engineering - Project Management
1605 Hendry Street
Fort Myers, FL 33901
239-418-0691 • 239-418-0692 fax
Florida Certificate of Authorization:
Engineering LB #: 26978

ENGINEER OF RECORD:
ANDREW D. FITZGERALD, P.E. (FOR THE FIRM)
FLORIDA P.E. NO. 56776

NOT VALID WITHOUT SEAL, SIGNATURE AND DATE

OWNER / DEVELOPER:
PAN TERRA HOLDINGS, LTD
150 ALHAMBRA CIRCLE, #925
CORAL GABLES, FL 33134

PROJECT:
VERDANA

PLAN REVISIONS

#	DATE	DESCRIPTION

DETAILED DRAINAGE PLAN 'H'

Project Manager:	ADF
Drawn By:	CAS
Checked By:	ADF
Project Number:	21375
Part of Section(s):	29,31,32
Township: 46 S	Range: 27 E
County, State:	LEE COUNTY, FL

Status:
FOR PERMITTING PURPOSES ONLY
NOT FOR CONSTRUCTION

Sheet Number: 11

K:\21375 - CQRK\SCREW GROVE\SER\PLAN SET\21375-11-DET-DRAIN-H.DWG
9/29/2016 4:35 PM

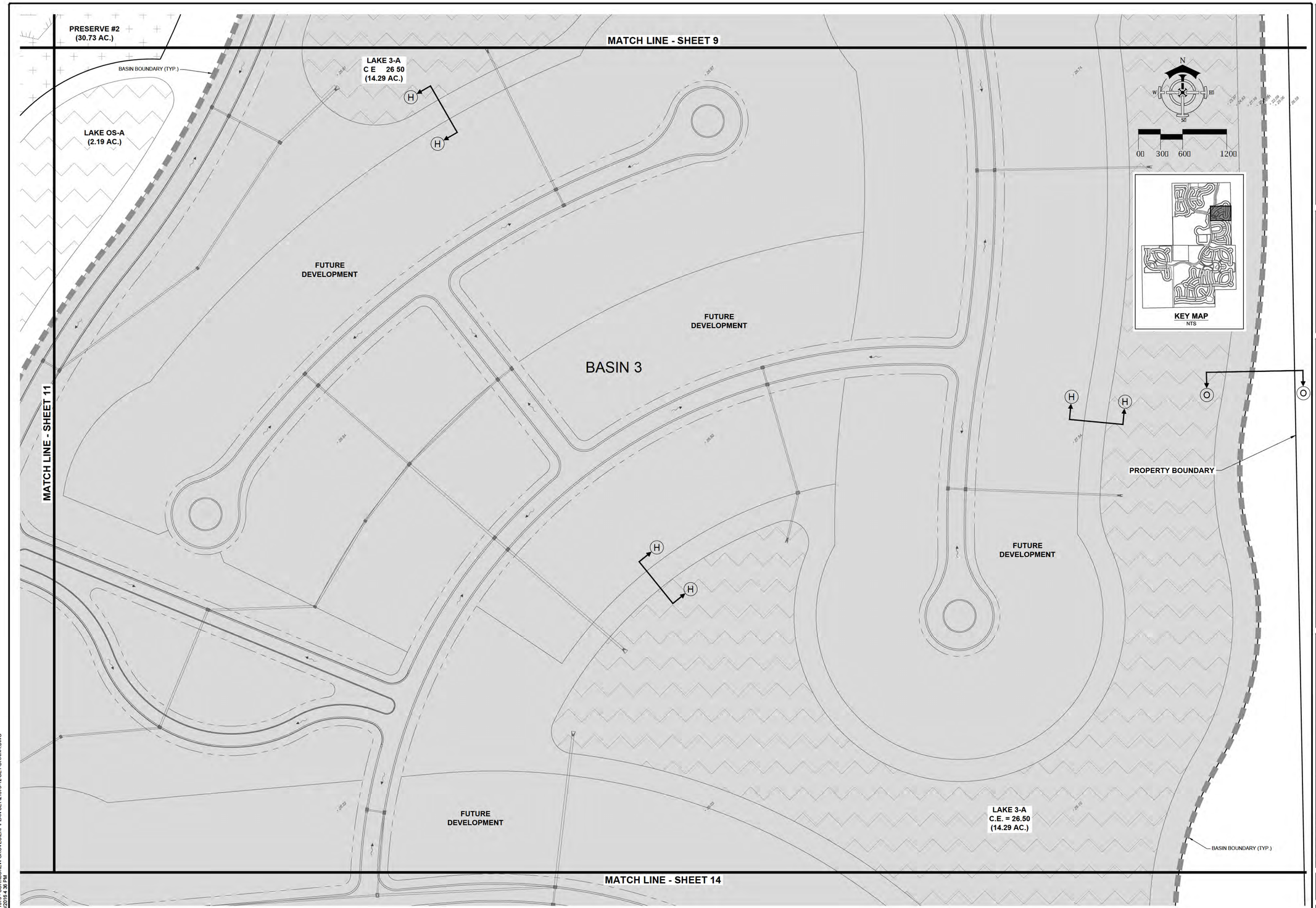

DELISI FITZGERALD, INC.
Planning - Engineering - Project Management
1605 Hendry Street
Fort Myers, FL 33901
239-418-0651 • 239-418-0692 fax
Florida Certificate of Authorization:
Engineering LB # 26978

ENGINEER OF RECORD:
ANDREW D. FITZGERALD, P.E. (FOR THE FIRM)
FLORIDA P.E. NO. 56776

NOT VALID WITHOUT SEAL, SIGNATURE AND DATE

OWNER / DEVELOPER:
PAN TERRA HOLDINGS, LTD
150 ALHAMBRA CIRCLE #925
CORAL GABLES, FL 33134

PROJECT:
VERDANA

PLAN REVISIONS

#	DATE	DESCRIPTION

DETAILED DRAINAGE PLAN 'I'

Project Manager:	ADF
Drawn By:	CAS
Checked By:	ADF
Project Number:	21375
Part of Section(s):	29,31,32
Township: 46 S	Range: 27 E
County, State:	LEE COUNTY, FL

Status:
FOR PERMITTING PURPOSES ONLY
NOT FOR CONSTRUCTION

Sheet Number: 12

K:\21375 - CORKSCREW GROVE\SERP\PLAN SET\21375-12-DET-DRAIN-I.DWG
9/29/2016 4:36 PM

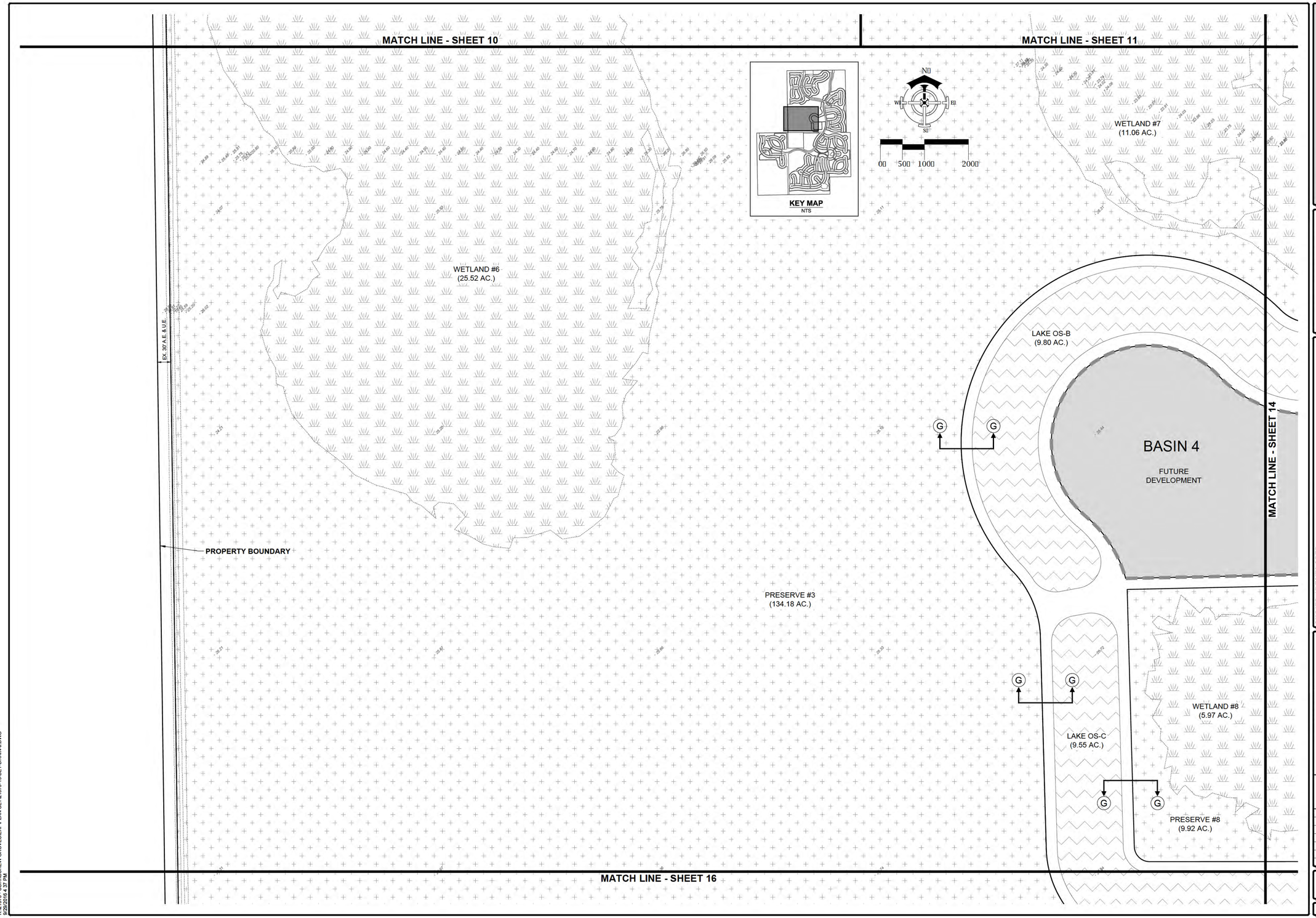

K:\21375 - CORKSCREW GROVE\SERP\PLAN SET\21375-13-DET-DRAIN-1.DWG
9/29/2016 4:37 PM

DELISI FITZGERALD, INC.
Planning - Engineering - Project Management
1605 Hendry Street
Fort Myers, FL 33901
239-418-0691 • 239-418-0692 fax
Florida Certificate of Authorization:
Engineering LB #: 26978

ENGINEER OF RECORD:
ANDREW D. FITZGERALD, P.E. (FOR THE FIRM)
FLORIDA P.E. NO. 56776

NOT VALID WITHOUT SEAL, SIGNATURE AND DATE

OWNER / DEVELOPER:
PAN TERRA HOLDINGS, LTD
150 ALHAMBRA CIRCLE #925
CORAL GABLES, FL 33134

PROJECT:
VERDANA

PLAN REVISIONS

#	DATE	DESCRIPTION

DETAILED DRAINAGE PLAN 'J'

Project Manager:	ADF
Drawn By:	CAS
Checked By:	ADF
Project Number:	21375
Part of Section(s):	29,31,32
Township: 46 S	Range: 27 E
County, State:	LEE COUNTY, FL

Status:
FOR PERMITTING PURPOSES ONLY
NOT FOR CONSTRUCTION

Sheet Number: 13

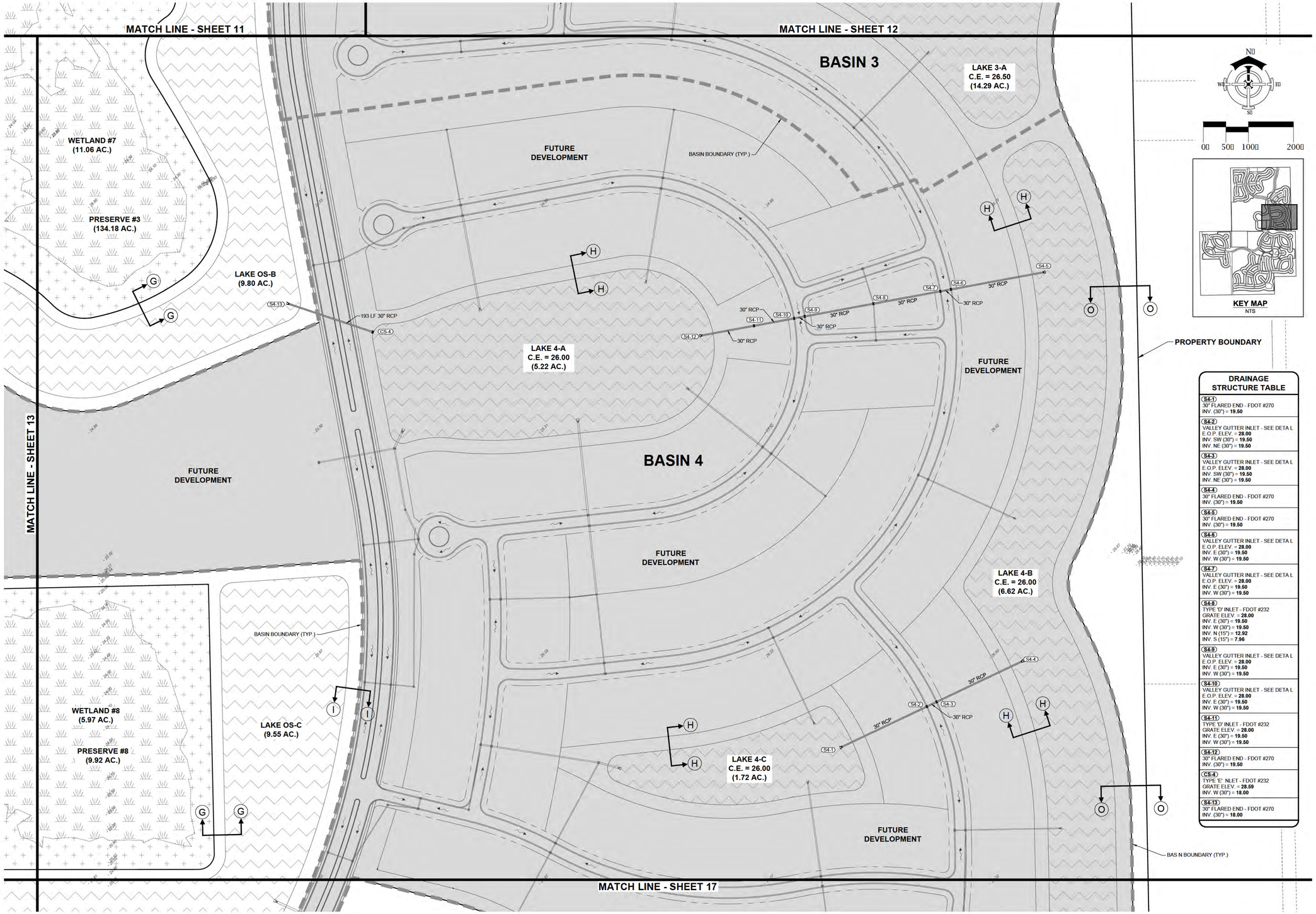

DRAINAGE STRUCTURE TABLE

S4-1
30" FLARED END - FDOT #270
INV. (30") = **19.50**

S4-2
VALLEY GUTTER INLET - SEE DETA L
E.O.P. ELEV. = **28.00**
INV. SW (30") = **19.50**
INV. NE (30") = **19.50**

S4-3
VALLEY GUTTER INLET - SEE DETA L
E.O.P. ELEV. = **28.00**
INV. SW (30") = **19.50**
INV. NE (30") = **19.50**

S4-4
30" FLARED END - FDOT #270
INV. (30") = **19.50**

S4-5
30" FLARED END - FDOT #270
INV. (30") = **19.50**

S4-6
VALLEY GUTTER INLET - SEE DETA L
E.O.P. ELEV. = **28.00**
INV. E (30") = **19.50**
INV. W (30") = **19.50**

S4-7
VALLEY GUTTER INLET - SEE DETA L
E.O.P. ELEV. = **28.00**
INV. E (30") = **19.50**
INV. W (30") = **19.50**

S4-8
TYPE 'D' INLET - FDOT #232
GRATE ELEV. = **28.00**
INV. E (30") = **19.50**
INV. W (30") = **19.50**
INV. N (15") = **12.92**
INV. S (15") = **7.96**

S4-9
VALLEY GUTTER INLET - SEE DETA L
E.O.P. ELEV. = **28.00**
INV. E (30") = **19.50**
INV. W (30") = **19.50**

S4-10
VALLEY GUTTER INLET - SEE DETA L
E.O.P. ELEV. = **28.00**
INV. E (30") = **19.50**
INV. W (30") = **19.50**

S4-11
TYPE 'D' INLET - FDOT #232
GRATE ELEV. = **28.00**
INV. E (30") = **19.50**
INV. W (30") = **19.50**

S4-12
30" FLARED END - FDOT #270
INV. (30") = **19.50**

CS-4
TYPE 'E' INLET - FDOT #232
GRATE ELEV. = **28.59**
INV. W (30") = **18.00**

S4-13
30" FLARED END - FDOT #270
INV. (30") = **18.00**

DELISI FITZGERALD, INC.
Planning - Engineering - Project Management
1605 Hendry Street
Fort Myers, FL 33901
239-418-0651 • 239-418-0692 fax
Florida Certificate of Authorization: Engineering LB #: 26978

ENGINEER OF RECORD:
ANDREW D. FITZGERALD, P.E. (FOR THE FIRM)
FLORIDA P.E. NO. 56776

NOT VALID WITHOUT SEAL, SIGNATURE AND DATE

OWNER / DEVELOPER:
PAN TERRA HOLDINGS, LTD
150 ALHAMBRA CIRCLE, #925
CORAL GABLES, FL 33134

PROJECT:
VERDANA

PLAN REVISIONS

#	DATE	DESCRIPTION

DETAILED DRAINAGE PLAN 'K'

Project Manager:	ADF
Drawn By:	CAS
Checked By:	ADF
Project Number:	21375
Part of Section(s):	29,31,32
Township: 46 S	Range: 27 E
County, State:	LEE COUNTY, FL

Status:
FOR PERMITTING PURPOSES ONLY
NOT FOR CONSTRUCTION

Sheet Number: 14

K:\21375 - CORKSCREW GROVE\SERP\PLAN SET\21375-14-DET-DRAIN-K.DWG
9/29/2016 4:37 PM

KEY MAP
NTS

RAINAGE STRUCTURE TABLE
S8-1 30" FLARED END - FDOT #270 INV. (30") = **20.00**
S8-2 VALLEY GUTTER INLET - SEE DETA L E.O.P. ELEV. = **25.00** INV. N (30") = **20.00** INV. S (30") = **20.00**
S8-3 VALLEY GUTTER INLET SEE DETA L E.O.P. ELEV. = **25.00** INV. N (30") = **20.00** INV. S (30") = **17.00**
S8-4 30" FLARED END - FDOT #270 INV. (30") = **17.00**
S8-5 30" FLARED END - FDOT #270 INV. (30") = **17.00**
S8-6 VALLEY GUTTER INLET - SEE DETA L E.O.P. ELEV. = **25.00** INV. NW (30") = **17.00** INV. SE (30") = **17.00**
S8-7 VALLEY GUTTER INLET - SEE DETA L E.O.P. ELEV. = **25.00** INV. NW (30") = **17.00** INV. SE (30") = **17.00**
S8-8 30" FLARED END - FDOT #270 INV. (30") = **17.00**
S8-9 30" FLARED END - FDOT #270 INV. (30") = **17.00**
S8-10 VALLEY GUTTER INLET - SEE DETA L E.O.P. ELEV. = **25.00** INV. N (30") = **17.00** INV. S (30") = **17.00**
S8-11 VALLEY GUTTER INLET - SEE DETA L E.O.P. ELEV. = **25.00** INV. N (30") = **17.00** INV. S (30") = **17.00**
S8-12 30" FLARED END - FDOT #270 INV. (30") = **17.00**
S8-13 30" FLARED END - FDOT #270 INV. (30") = **17.00**

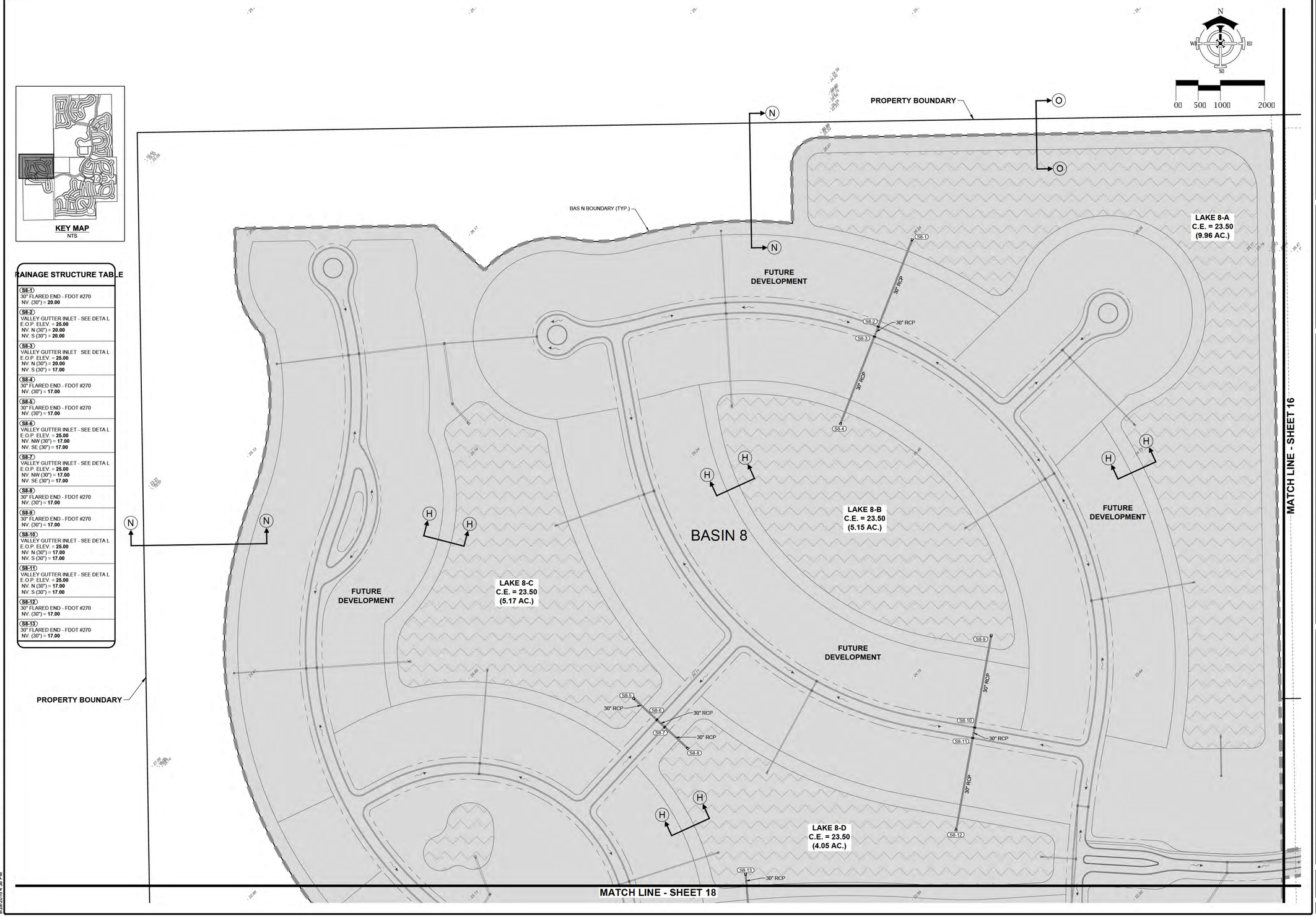

K:\21375 - CORKSCREW GROVE\SERP\PLAN SET\21375-15-DET-DRAIN.L.DWG
9/29/2016 4:39 PM

DELISI FITZGERALD, INC.
Planning - Engineering - Project Management
1605 Hendry Street
Fort Myers, FL 33901
239-418-0691 • 239-418-0692 fax
Florida Certificate of Authorization:
Engineering LB # :26978

ENGINEER OF RECORD:
ANDREW D. FITZGERALD, P.E (FOR THE FIRM)
FLORIDA P.E. NO. 56776

NOT VALID WITHOUT SEAL, SIGNATURE AND DATE

OWNER / DEVELOPER:
PAN TERRA HOLDINGS, LTD
150 ALHAMBRA CIRCLE #925
CORAL GABLES, FL 33134

PROJECT:
VERDANA

PLAN REVISIONS

#	DATE	DESCRIPTION

DETAILED DRAINAGE PLAN 'L'

Project Manager:	ADF
Drawn By:	CAS
Checked By:	ADF
Project Number:	21375
Part of Section(s):	29,31,32
Township: 46 S	Range: 27 E
County, State:	LEE COUNTY, FL

Status:
FOR PERMITTING PURPOSES ONLY
NOT FOR CONSTRUCTION

Sheet Number: 15

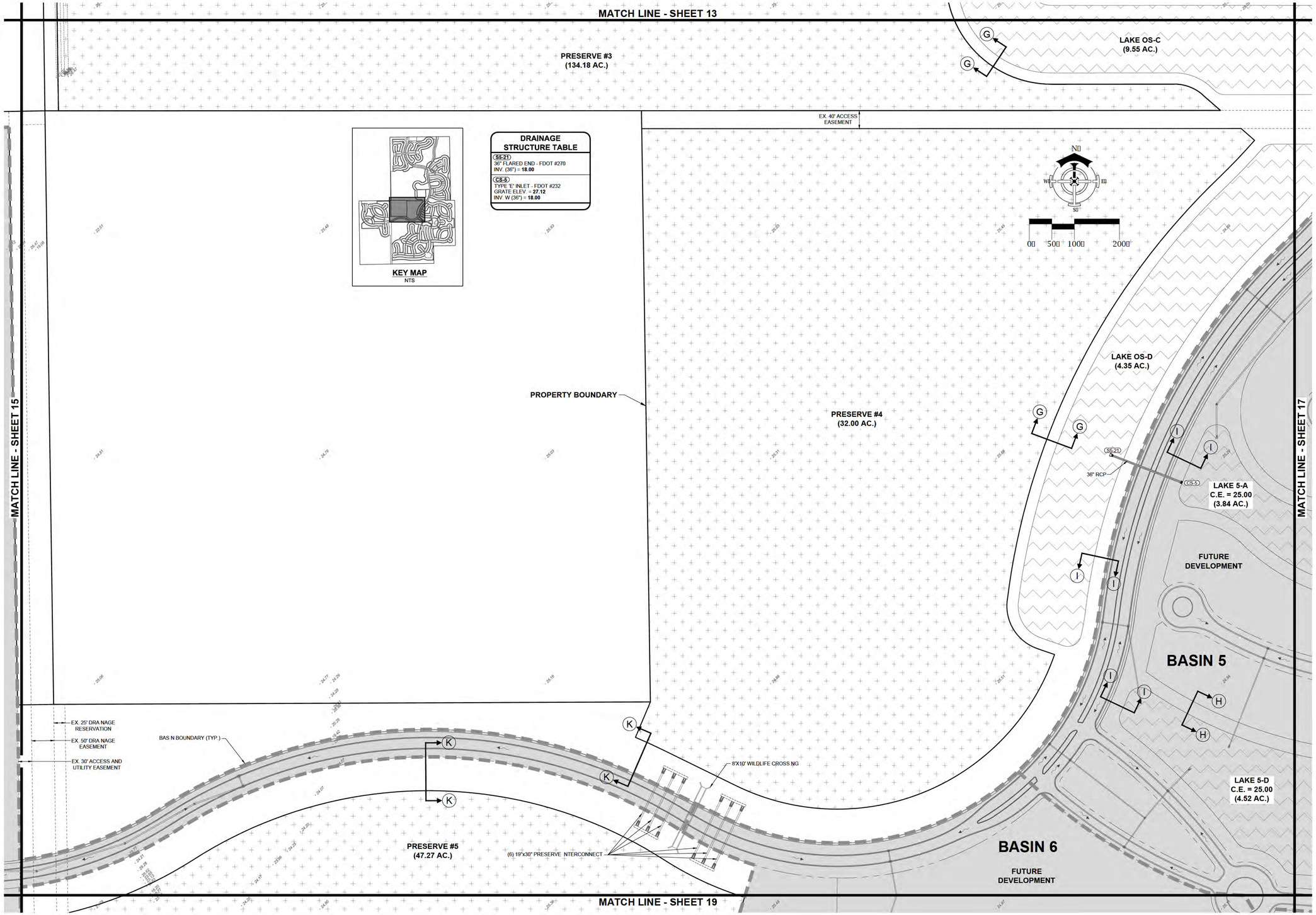

K:\21375 - CORKSCREW GROVE\SER\PP\PLAN SET\21375-16-DET-DRAIN-M.DWG
9/29/2016 4:39 PM

DELISI FITZGERALD, INC.
Planning - Engineering - Project Management
1605 Hendry Street
Fort Myers, FL 33901
239-418-0651 • 239-418-0692 fax
Florida Certificate of Authorization: Engineering LB #: 26978

ENGINEER OF RECORD:
ANDREW D. FITZGERALD, P.E. (FOR THE FIRM)
FLORIDA P.E. NO. 56776

NOT VALID WITHOUT SEAL, SIGNATURE AND DATE

OWNER / DEVELOPER:
PAN TERRA HOLDINGS, LTD
150 ALHAMBRA CIRCLE, #925
CORAL GABLES, FL 33134

PROJECT:
VERDANA

PLAN REVISIONS

#	DATE	DESCRIPTION

DETAILED DRAINAGE PLAN 'M'

Project Manager:	ADF
Drawn By:	CAS
Checked By:	ADF
Project Number:	21375
Part of Section(s):	29,31,32
Township: 46 S	Range: 27 E
County, State:	LEE COUNTY, FL

Status:
FOR PERMITTING PURPOSES ONLY
NOT FOR CONSTRUCTION

Sheet Number: 16

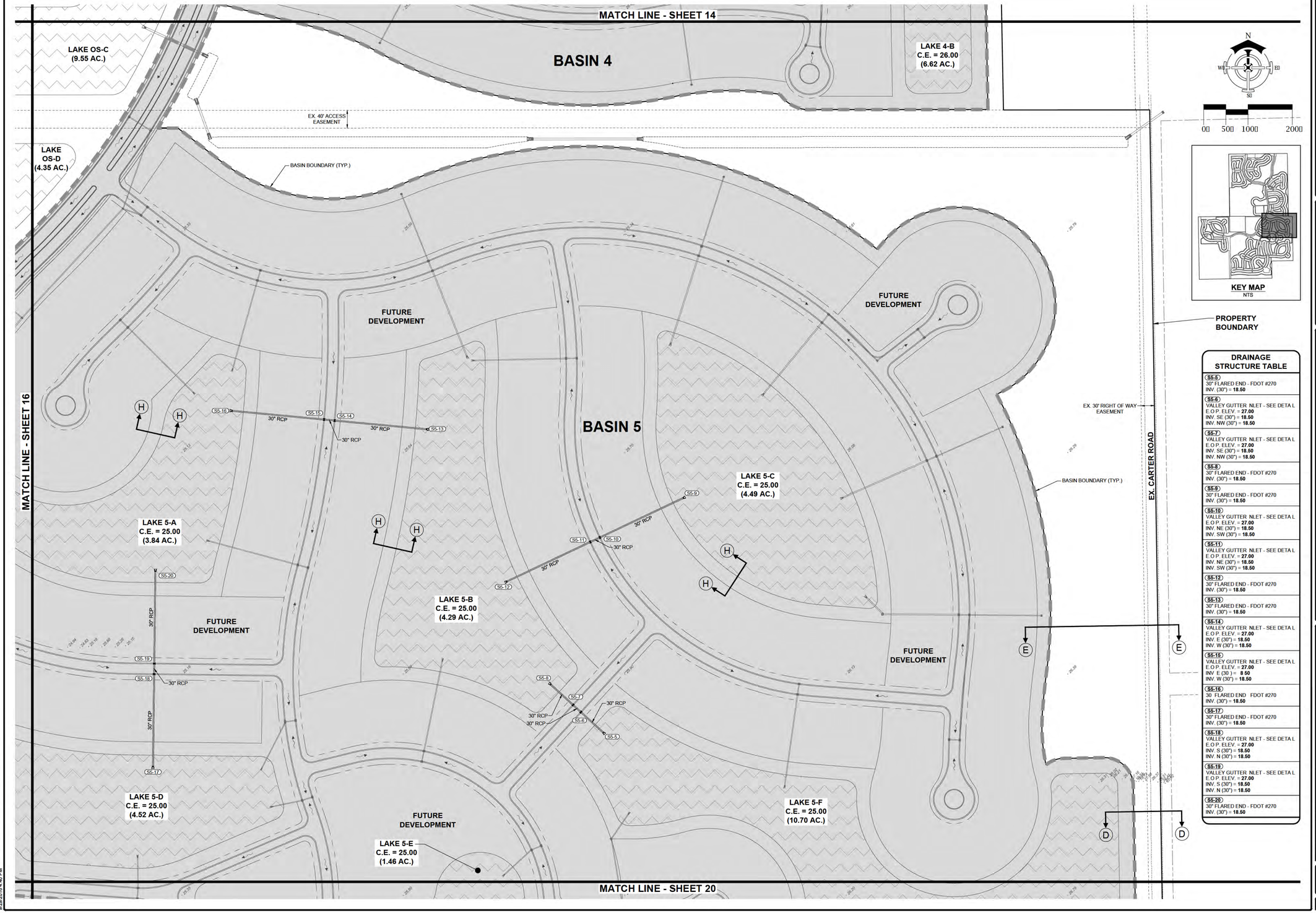

DRAINAGE STRUCTURE TABLE

S5-5	30" FLARED END - FDOT #270 INV. (30") = **18.50**
S5-6	VALLEY GUTTER NLET - SEE DETA L E.O.P. ELEV. = **27.00** INV. SE (30") = **18.50** INV. NW (30") = **18.50**
S5-7	VALLEY GUTTER NLET - SEE DETA L E.O.P. ELEV. = **27.00** INV. SE (30") = **18.50** INV. NW (30") = **18.50**
S5-8	30" FLARED END - FDOT #270 INV. (30") = **18.50**
S5-9	30" FLARED END - FDOT #270 INV. (30") = **18.50**
S5-10	VALLEY GUTTER NLET - SEE DETA L E.O.P. ELEV. = **27.00** INV. NE (30") = **18.50** INV. SW (30") = **18.50**
S5-11	VALLEY GUTTER NLET - SEE DETA L E.O.P. ELEV. = **27.00** INV. NE (30") = **18.50** INV. SW (30") = **18.50**
S5-12	30" FLARED END - FDOT #270 INV. (30") = **18.50**
S5-13	30" FLARED END - FDOT #270 INV. (30") = **18.50**
S5-14	VALLEY GUTTER NLET - SEE DETA L E.O.P. ELEV. = **27.00** INV. E (30") = **18.50** INV. W (30") = **18.50**
S5-15	VALLEY GUTTER NLET - SEE DETA L E.O.P. ELEV. = **27.00** INV. E (30)= **8.50** INV. W (30") = **18.50**
S5-16	30 FLARED END FDOT #270 INV. (30") = **18.50**
S5-17	30" FLARED END - FDOT #270 INV. (30") = **18.50**
S5-18	VALLEY GUTTER NLET - SEE DETA L E.O.P. ELEV. = **27.00** INV. S (30") = **18.50** INV. N (30") = **18.50**
S5-19	VALLEY GUTTER NLET - SEE DETA L E.O.P. ELEV. = **27.00** INV. S (30") = **18.50** INV. N (30") = **18.50**
S5-20	30" FLARED END - FDOT #270 INV. (30") = **18.50**

DELISI FITZGERALD, INC.
Planning - Engineering - Project Management
1605 Hendry Street
Fort Myers, FL 33901
239-418-0651 • 239-418-0692 fax
Florida Certificate of Authorization:
Engineering LB #: 26978

ENGINEER OF RECORD:
ANDREW D. FITZGERALD, P.E. (FOR THE FIRM)
FLORIDA P.E. NO. 56776

NOT VALID WITHOUT SEAL, SIGNATURE AND DATE

OWNER / DEVELOPER:
PAN TERRA HOLDINGS, LTD
150 ALHAMBRA CIRCLE #925
CORAL GABLES, FL 33134

PROJECT:
VERDANA

PLAN REVISIONS

#	DATE	DESCRIPTION

DETAILED DRAINAGE PLAN 'N'

Project Manager:	ADF
Drawn By:	CAS
Checked By:	ADF
Project Number:	21375
Part of Section(s):	29,31,32
Township: 46 S	Range: 27 E
County, State:	LEE COUNTY, FL

Status:
FOR PERMITTING PURPOSES ONLY
NOT FOR CONSTRUCTION

Sheet Number: 17

K:\21375 - CORKSCREW GROVE\SERP\PLAN SET\21375-17-DET-DRAIN-N.DWG
9/29/2016 4:40 PM

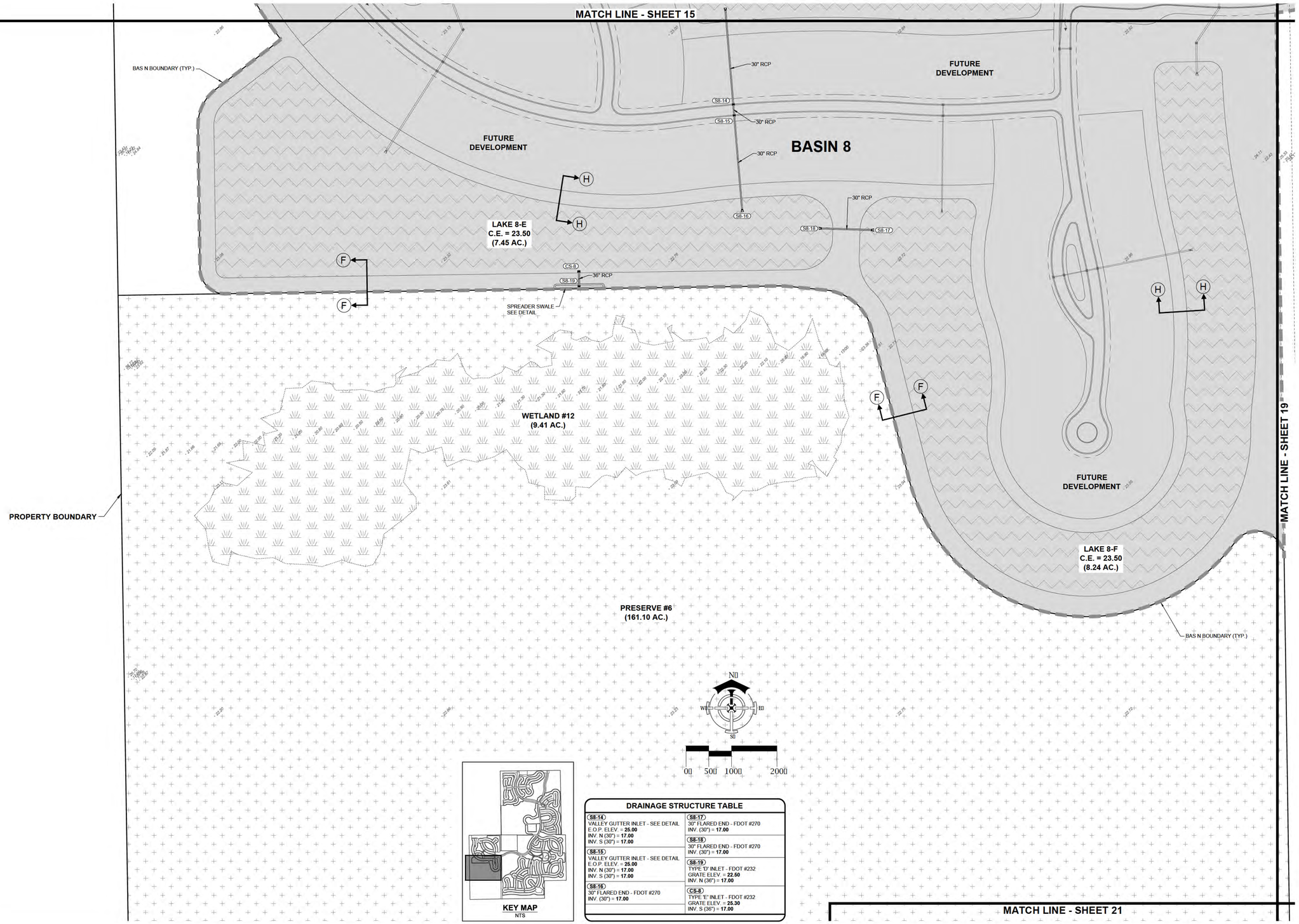

DRAINAGE STRUCTURE TABLE

S8-14 VALLEY GUTTER INLET - SEE DETAIL E.O.P. ELEV. = **25.00** INV. N (30") = **17.00** INV. S (30") = **17.00**	**S8-17** 30" FLARED END - FDOT #270 INV. (30") = **17.00**
S8-15 VALLEY GUTTER INLET - SEE DETAIL E.O.P. ELEV. = **25.00** INV. N (30") = **17.00** INV. S (30") = **17.00**	**S8-18** 30" FLARED END - FDOT #270 INV. (30") = **17.00**
S8-16 30" FLARED END - FDOT #270 INV. (30") = **17.00**	**S8-19** TYPE 'D' INLET - FDOT #232 GRATE ELEV. = **22.50** INV. N (36") = **17.00**
	CS-8 TYPE 'E' INLET - FDOT #232 GRATE ELEV. = **25.30** INV. S (36") = **17.00**

K:\21375 - CORKSCREW GROVE\SERP\PLAN SET\21375-18-DET-DRAIN-O.DWG
9/29/2016 4:41 PM

DELISI FITZGERALD, INC.
Planning - Engineering - Project Management
1605 Hendry Street
Fort Myers, FL 33901
239-418-0651 • 239-418-0692 fax
Florida Certificate of Authorization:
Engineering LB # :26978

ENGINEER OF RECORD:
ANDREW D. FITZGERALD, P.E (FOR THE FIRM)
FLORIDA P.E. NO. 56776

NOT VALID WITHOUT SEAL, SIGNATURE AND DATE

OWNER / DEVELOPER:
PAN TERRA HOLDINGS, LTD
150 ALHAMBRA CIRCLE #925
CORAL GABLES, FL 33134

PROJECT:
VERDANA

PLAN REVISIONS

#	DATE	DESCRIPTION

DETAILED DRAINAGE PLAN 'O'

Project Manager:	ADF
Drawn By:	CAS
Checked By:	ADF
Project Number:	21375
Part of Section(s):	29,31,32
Township: 46 S	Range: 27 E
County, State:	LEE COUNTY, FL

Status:
FOR PERMITTING PURPOSES ONLY
NOT FOR CONSTRUCTION

Sheet Number: 18

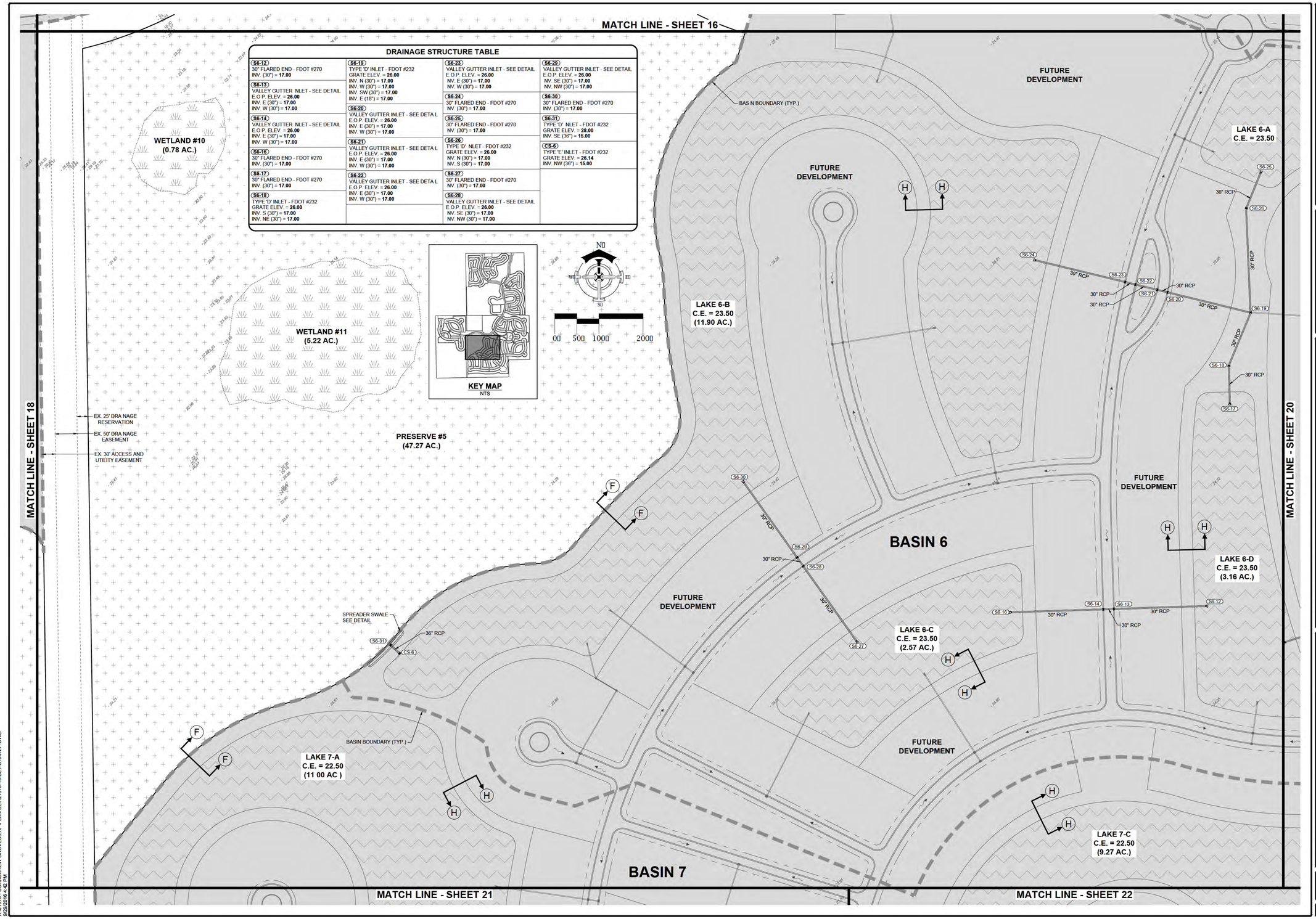

DRAINAGE STRUCTURE TABLE

S6-12 30" FLARED END - FDOT #270 INV. (30") = **17.00**	**S6-19** TYPE 'D' INLET - FDOT #232 GRATE ELEV. = **26.00** INV. N (30") = **17.00** INV. W (30") = **17.00** INV. SW (30") = **17.00** INV. E (18") = **17.00**	**S6-23** VALLEY GUTTER INLET - SEE DETAIL E.O.P. ELEV. = **26.00** NV. E (30") = **17.00** NV. W (30") = **17.00**	**S6-29** VALLEY GUTTER INLET - SEE DETAIL E.O.P. ELEV. = **26.00** NV. SE (30") = **17.00** NV. NW (30") = **17.00**
S6-13 VALLEY GUTTER NLET - SEE DETAIL E.O.P. ELEV. = **26.00** INV. E (30") = **17.00** INV. W (30") = **17.00**	**S6-20** VALLEY GUTTER INLET - SEE DETA L E.O.P. ELEV. = **26.00** INV. E (30") = **17.00** INV. W (30") = **17.00**	**S6-24** 30" FLARED END - FDOT #270 NV. (30") = **17.00**	**S6-30** 30" FLARED END - FDOT #270 INV. (30") = **17.00**
S6-14 VALLEY GUTTER NLET - SEE DETAIL E.O.P. ELEV. = **26.00** INV. E (30") = **17.00** INV. W (30") = **17.00**	**S6-21** VALLEY GUTTER INLET - SEE DETA L E.O.P. ELEV. = **26.00** INV. E (30") = **17.00** INV. W (30") = **17.00**	**S6-25** 30" FLARED END - FDOT #270 NV. (30") = **17.00**	**S6-31** TYPE 'D' NLET - FDOT #232 GRATE ELEV. = **28.00** INV. SE (30") = **15.00**
S6-16 30" FLARED END - FDOT #270 INV. (30") = **17.00**	**S6-22** VALLEY GUTTER INLET - SEE DETA L E.O.P. ELEV. = **26.00** INV. E (30") = **17.00** INV. W (30") = **17.00**	**S6-26** TYPE 'D' NLET - FDOT #232 GRATE ELEV. = **26.00** NV. N (30") = **17.00** NV. S (30") = **17.00**	**CS-6** TYPE 'E' INLET - FDOT #232 GRATE ELEV. = **26.14** INV. NW (36") = **15.00**
S6-17 30" FLARED END - FDOT #270 INV. (30") = **17.00**		**S6-27** 30" FLARED END - FDOT #270 NV. (30") = **17.00**	
S6-18 TYPE 'D' INLET - FDOT #232 GRATE ELEV. = **26.00** INV. S (30") = **17.00** INV. NE (30") = **17.00**		**S6-28** VALLEY GUTTER INLET - SEE DETAIL E.O.P. ELEV. = **26.00** NV. SE (30") = **17.00** NV. NW (30") = **17.00**	

K:\21375 - CORKSCREW GROVE\SERP\PLAN SET\21375-19-DET-DRAIN-P.DWG
9/29/2016 4:42 PM

DELISI FITZGERALD, INC.
Planning - Engineering - Project Management
1605 Hendry Street
Fort Myers, FL 33901
239-418-0691 • 239-418-0692 fax
Florida Certificate of Authorization: Engineering LB # :26978

ENGINEER OF RECORD:
ANDREW D. FITZGERALD, P.E (FOR THE FIRM)
FLORIDA P.E. NO. 56776

NOT VALID WITHOUT SEAL, SIGNATURE AND DATE

OWNER / DEVELOPER:
PAN TERRA HOLDINGS, LTD
150 ALHAMBRA CIRCLE #925
CORAL GABLES, FL 33134

PROJECT:
VERDANA

PLAN REVISIONS

#	DATE	DESCRIPTION

DETAILED DRAINAGE PLAN 'P'

Project Manager:	ADF
Drawn By:	CAS
Checked By:	ADF
Project Number:	21375
Part of Section(s):	29,31,32
Township: 46 S	Range: 27 E
County, State:	LEE COUNTY, FL

Status:
FOR PERMITTING PURPOSES ONLY
NOT FOR CONSTRUCTION

Sheet Number: 19

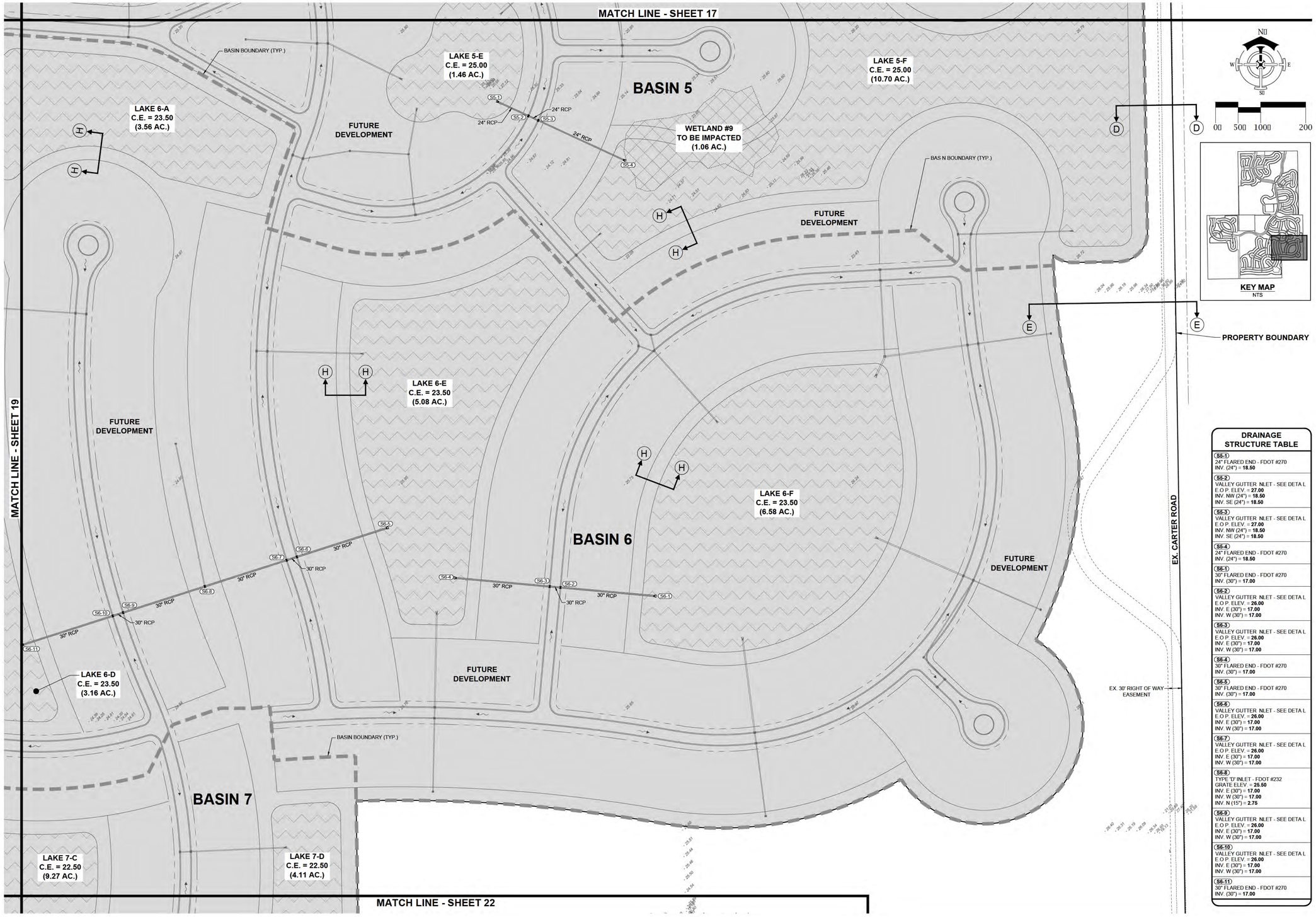

DRAINAGE STRUCTURE TABLE

SS-1
24" FLARED END - FDOT #270
INV. (24") = **18.50**

SS-2
VALLEY GUTTER NLET - SEE DETA L
E.O.P. ELEV. = **27.00**
INV. NW (24") = **18.50**
INV. SE (24") = **18.50**

SS-3
VALLEY GUTTER NLET - SEE DETA L
E.O.P. ELEV. = **27.00**
INV. NW (24") = **18.50**
INV. SE (24") = **18.50**

SS-4
24" FLARED END - FDOT #270
INV. (24") = **18.50**

S6-1
30" FLARED END - FDOT #270
INV. (30") = **17.00**

S6-2
VALLEY GUTTER NLET - SEE DETA L
E.O.P. ELEV. = **26.00**
INV. E (30") = **17.00**
INV. W (30") = **17.00**

S6-3
VALLEY GUTTER NLET - SEE DETA L
E.O.P. ELEV. = **26.00**
INV. E (30") = **17.00**
INV. W (30") = **17.00**

S6-4
30" FLARED END - FDOT #270
INV. (30") = **17.00**

S6-5
30" FLARED END - FDOT #270
INV. (30") = **17.00**

S6-6
VALLEY GUTTER NLET - SEE DETA L
E.O.P. ELEV. = **26.00**
INV. E (30") = **17.00**
INV. W (30") = **17.00**

S6-7
VALLEY GUTTER NLET - SEE DETA L
E.O.P. ELEV. = **26.00**
INV. E (30") = **17.00**
INV. W (30") = **17.00**

S6-8
TYPE "D" INLET - FDOT #232
GRATE ELEV. = **25.50**
INV. E (30") = **17.00**
INV. W (30") = **17.00**
INV. N (15") = **2.75**

S6-9
VALLEY GUTTER NLET - SEE DETA L
E.O.P. ELEV. = **26.00**
INV. E (30") = **17.00**
INV. W (30") = **17.00**

S6-10
VALLEY GUTTER NLET - SEE DETA L
E.O.P. ELEV. = **26.00**
INV. E (30") = **17.00**
INV. W (30") = **17.00**

S6-11
30" FLARED END - FDOT #270
INV. (30") = **17.00**

DELISI FITZGERALD, INC.
Planning - Engineering - Project Management
1605 Hendry Street
Fort Myers, FL 33901
239-418-0691 • 239-418-0692 fax
Florida Certificate of Authorization:
Engineering LB #: 26978

ENGINEER OF RECORD:
ANDREW D. FITZGERALD, P.E. (FOR THE FIRM)
FLORIDA P.E. NO. 56776

NOT VALID WITHOUT SEAL, SIGNATURE AND DATE

OWNER / DEVELOPER:
PAN TERRA HOLDINGS, LTD
150 ALHAMBRA CIRCLE #925
CORAL GABLES, FL 33134

PROJECT:
VERDANA

PLAN REVISIONS

#	DATE	DESCRIPTION

DETAILED DRAINAGE PLAN 'Q'

Project Manager:	ADF
Drawn By:	CAS
Checked By:	ADF
Project Number:	21375
Part of Section(s):	29,31,32
Township: 46 S	Range: 27 E
County, State:	LEE COUNTY, FL

Status:
FOR PERMITTING PURPOSES ONLY
NOT FOR CONSTRUCTION

Sheet Number: 20

K:\21375 - CORKSCREW GROVE\SERP\PLAN SET\21375-20-DET-DRAIN-Q.DWG
9/29/2016 4:43 PM

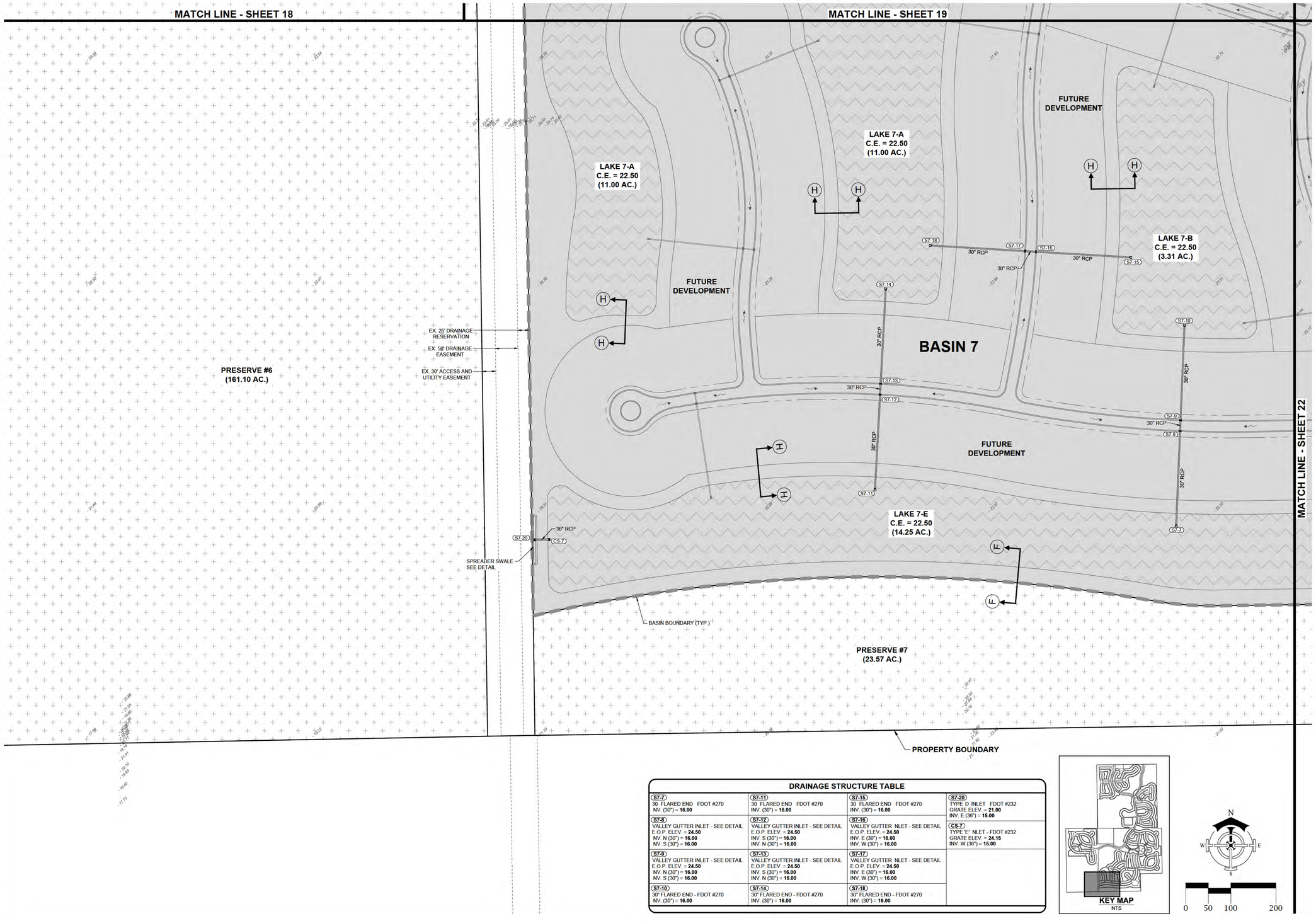

DRAINAGE STRUCTURE TABLE

S7-7 30 FLARED END FDOT #270 INV. (30") = **16.00**	S7-11 30 FLARED END FDOT #270 INV. (30") = **16.00**	S7-15 30 FLARED END FDOT #270 INV. (30") = **16.00**	S7-20 TYPE D INLET FDOT #232 GRATE ELEV. = **21.00** INV. E (36") = **15.00**
S7-8 VALLEY GUTTER INLET - SEE DETAIL E.O.P. ELEV. = **24.50** INV. N (30") = **16.00** INV. S (30") = **16.00**	S7-12 VALLEY GUTTER INLET - SEE DETAIL E.O.P. ELEV. = **24.50** INV. S (30") = **16.00** INV. N (30") = **16.00**	S7-16 VALLEY GUTTER NLET - SEE DETAIL E.O.P. ELEV. = **24.50** INV. E (30") = **16.00** INV. W (30") = **16.00**	CS-7 TYPE 'E' NLET - FDOT #232 GRATE ELEV. = **24.15** INV. W (36") = **15.00**
S7-9 VALLEY GUTTER INLET - SEE DETAIL E.O.P. ELEV. = **24.50** INV. N (30") = **16.00** INV. S (30") = **16.00**	S7-13 VALLEY GUTTER INLET - SEE DETAIL E.O.P. ELEV. = **24.50** INV. S (30") = **16.00** INV. N (30") = **16.00**	S7-17 VALLEY GUTTER NLET - SEE DETAIL E.O.P. ELEV. = **24.50** INV. E (30") = **16.00** INV. W (30") = **16.00**	
S7-10 30" FLARED END - FDOT #270 INV. (30") = **16.00**	S7-14 30" FLARED END - FDOT #270 INV. (30") = **16.00**	S7-18 30" FLARED END - FDOT #270 INV. (30") = **16.00**	

KEY MAP
NTS

N
W E
S

0 50 100 200

K:\21375 - CORKSCREW GROVE\SERP\PLAN SET\21375-21-DET-DRAIN-R.DWG
9/29/2016 4:43 PM

DeLisi Fitzgerald, Inc.
Planning - Engineering - Project Management
1605 Hendry Street
Fort Myers, FL 33901
239-418-0691 • 239-418-0692 fax
Florida Certificate of Authorization:
Engineering LB #: 26978

ENGINEER OF RECORD:
ANDREW D. FITZGERALD, P.E. (FOR THE FIRM)
FLORIDA P.E. NO. 56776

NOT VALID WITHOUT SEAL, SIGNATURE AND DATE

OWNER / DEVELOPER:
PAN TERRA HOLDINGS, LTD
150 ALHAMBRA CIRCLE #925
CORAL GABLES, FL 33134

PROJECT:
VERDANA

PLAN REVISIONS

#	DATE	DESCRIPTION

DETAILED DRAINAGE PLAN 'R'

Project Manager:	ADF
Drawn By:	CAS
Checked By:	ADF
Project Number:	21375
Part of Section(s):	29,31,32
Township: 46 S	Range: 27 E
County, State:	LEE COUNTY, FL

Status:
FOR PERMITTING PURPOSES ONLY
NOT FOR CONSTRUCTION

Sheet Number: 21

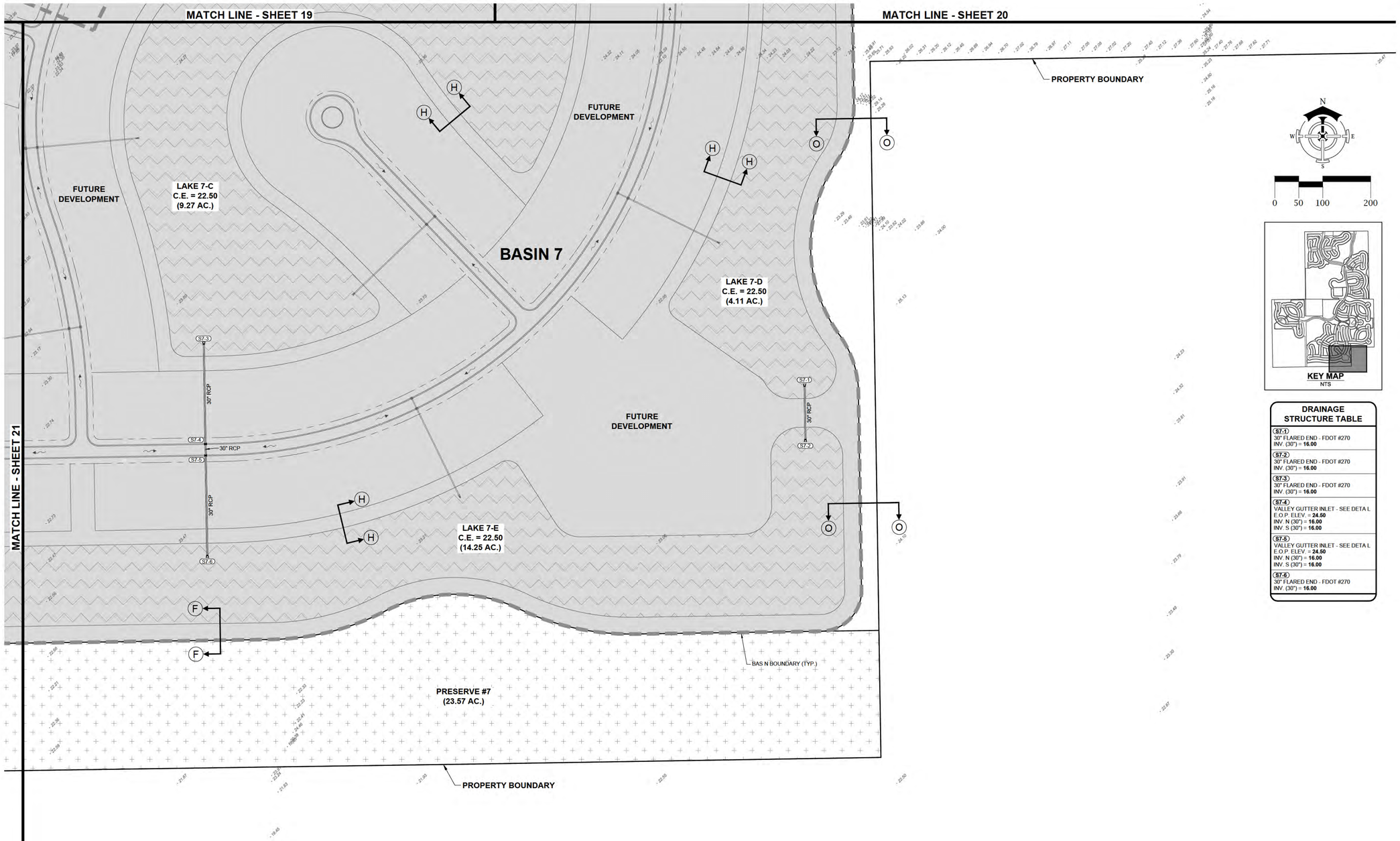

DRAINAGE STRUCTURE TABLE

S7-1	30" FLARED END - FDOT #270 INV. (30") = **16.00**
S7-2	30" FLARED END - FDOT #270 INV. (30") = **16.00**
S7-3	30" FLARED END - FDOT #270 INV. (30") = **16.00**
S7-4	VALLEY GUTTER INLET - SEE DETA L E.O.P. ELEV. = **24.50** INV. N (30") = **16.00** INV. S (30") = **16.00**
S7-5	VALLEY GUTTER INLET - SEE DETA L E.O.P. ELEV. = **24.50** INV. N (30") = **16.00** INV. S (30") = **16.00**
S7-6	30" FLARED END - FDOT #270 INV. (30") = **16.00**

DELISI FITZGERALD, INC.
Planning - Engineering - Project Management
1605 Hendry Street
Fort Myers, FL 33901
239-418-0691 • 239-418-0692 fax
Florida Certificate of Authorization:
Engineering LB # :26978

ENGINEER OF RECORD:
ANDREW D. FITZGERALD, P.E. (FOR THE FIRM)
FLORIDA P.E. NO.: 56776

NOT VALID WITHOUT SEAL, SIGNATURE AND DATE

OWNER / DEVELOPER:
PAN TERRA HOLDINGS, LTD
150 ALHAMBRA CIRCLE #925
CORAL GABLES, FL 33134

PROJECT:
VERDANA

PLAN REVISIONS

#	DATE	DESCRIPTION

DETAILED DRAINAGE PLAN 'S'

Project Manager:	ADF
Drawn By:	CAS
Checked By:	ADF
Project Number:	21375
Part of Section(s):	29,31,32
Township: 46 S	Range: 27 E
County, State:	LEE COUNTY, FL

Status:
FOR PERMITTING PURPOSES ONLY
NOT FOR CONSTRUCTION

Sheet Number: 22

K:\21375 - CORKSCREW GROVE\SERP\PLAN SET\21375-22-DET-DRAIN-S.DWG
9/29/2016 4:44 PM

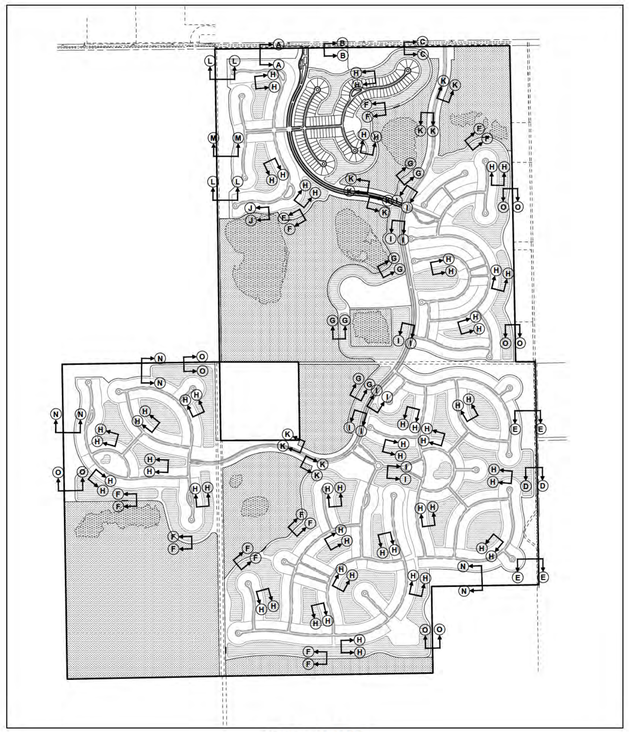

SECTION MAP
N.T.S.

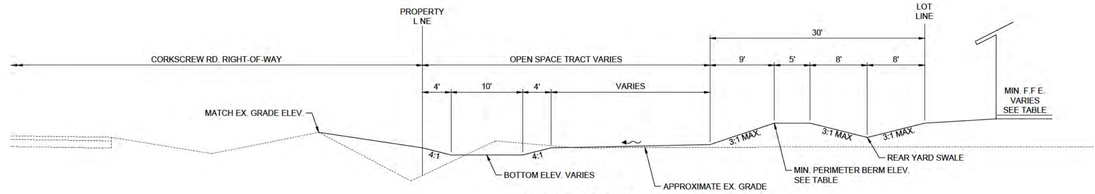

SECTION A-A
NTS

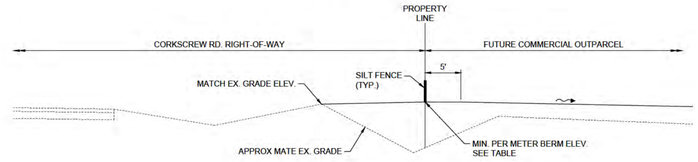

SECTION B-B
NTS

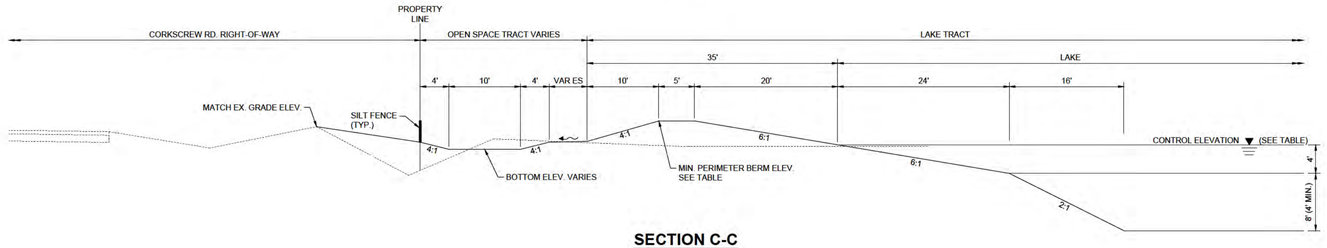

SECTION C-C
NTS

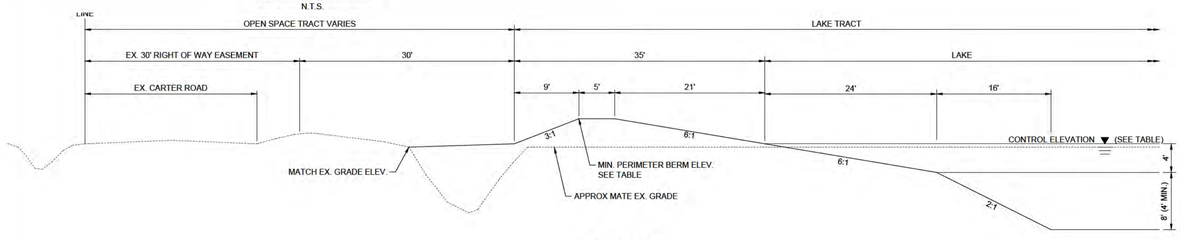

SECTION D-D
NTS

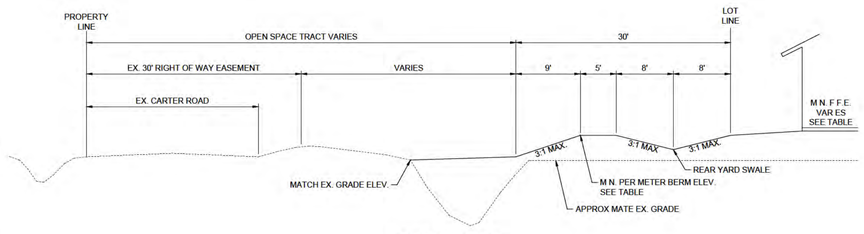

SECTION E-E
NTS

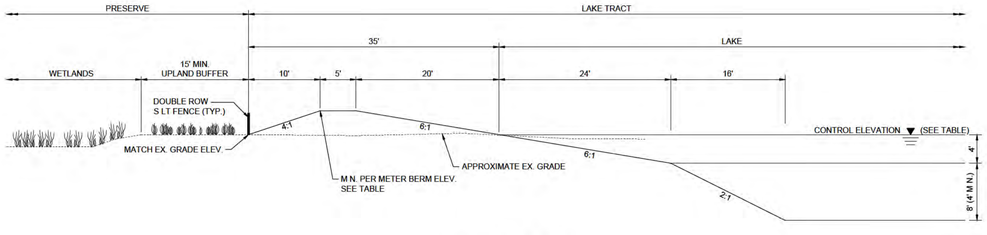

SECTION F-F
NTS

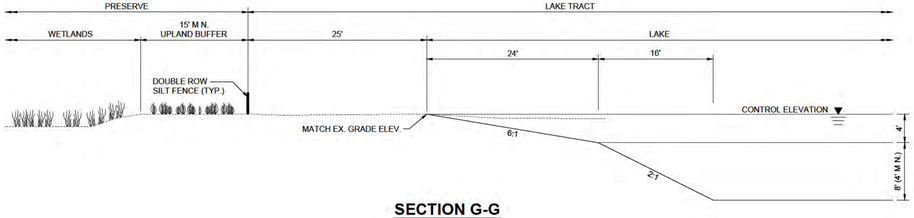

SECTION G-G
NTS

SURFACE WATER MANAGEMENT PARAMETERS

	BASIN 1	BASIN 2	BAS N 3	BASIN 4	BASIN 5	BASIN 6	BAS N 7	BASIN 8
CONTROL ELEVATION (FT-NAVD)	26 50	26.50	26 50	26 00	25.00	24.00	22.50	23 50
MIN MUM ROAD ELEVATION (FT-NAVD)	28 50	28.50	28 50	28 25	27.00	26.00	24.50	25 50
MIN MUM BERM ELEVATION (FT-NAVD)	29 00	29.50	29.00	29 00	27.75	26.50	24.75	25.75
MIN MUM FINISHED FLOOR ELEVATION (FT-NAVD)	29 50	29.50	29.75	29 00	28.00	27.00	25.50	26 50

K:\21375 - CORKSCREW GROVE\SERP\PLAN SET\21375-23-SECTIONS.DWG
9/29/2016 4:45 PM

DELISI FITZGERALD, INC.
Planning - Engineering - Project Management
1605 Hendry Street
Fort Myers, FL 33901
239-418-0691 • 239-418-0692 fax
Florida Certificate of Authorization: Engineering LB #: 26978

ENGINEER OF RECORD:
ANDREW D. FITZGERALD, P.E. (FOR THE FIRM)
FLORIDA P.E. NO. 56776

NOT VALID WITHOUT SEAL, SIGNATURE AND DATE

OWNER / DEVELOPER:
PAN TERRA HOLDINGS, LTD
150 ALHAMBRA CIRCLE #925
CORAL GABLES, FL 33134

PROJECT:
VERDANA

PLAN REVISIONS

#	DATE	DESCRIPTION

TYPICAL SECTIONS

Project Manager:	ADF
Drawn By:	CAS
Checked By:	ADF
Project Number:	21375
Part of Section(s):	29,31,32
Township: 46 S	Range: 27 E
County, State:	LEE COUNTY, FL

Status:
FOR PERMITTING PURPOSES ONLY
NOT FOR CONSTRUCTION

Sheet Number: 23

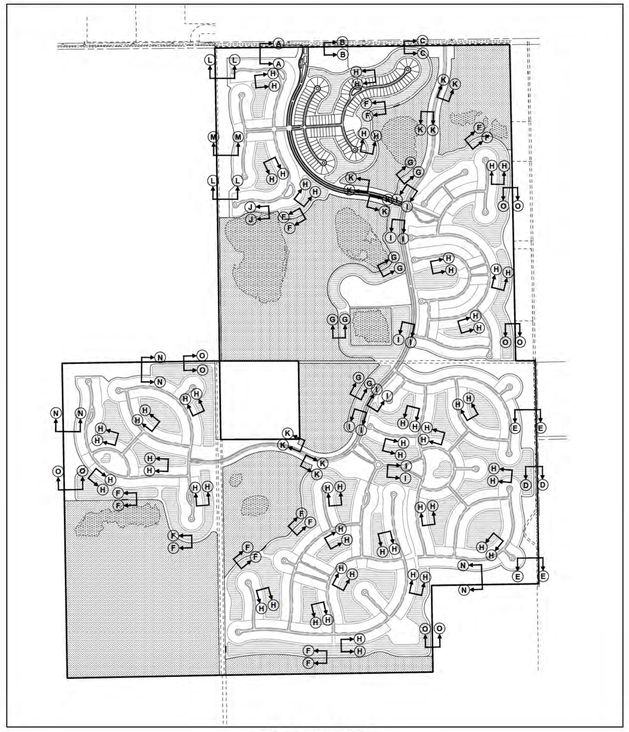

SECTION MAP
N.T.S.

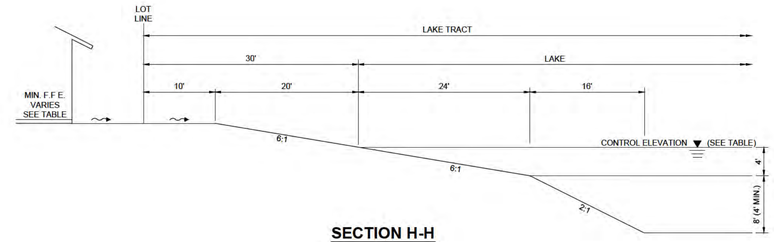

SECTION H-H
NTS

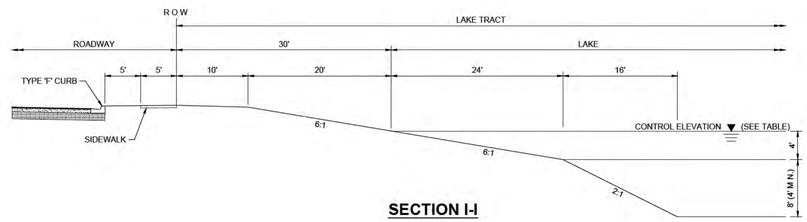

SECTION I-I
NTS

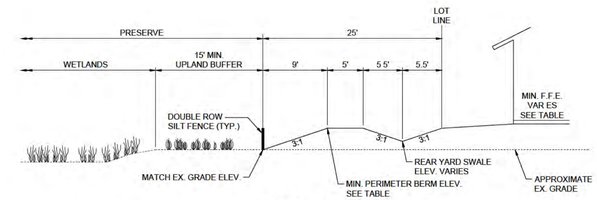

SECTION J-J
NTS

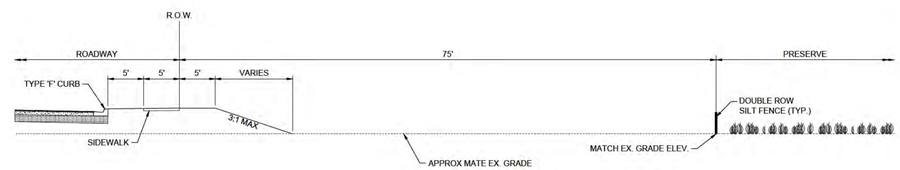

SECTION K-K
NTS

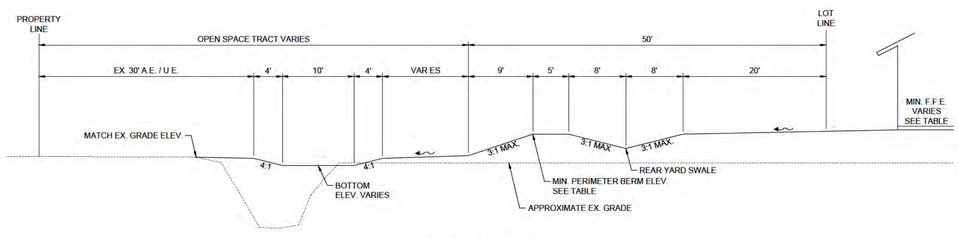

SECTION L-L
NTS

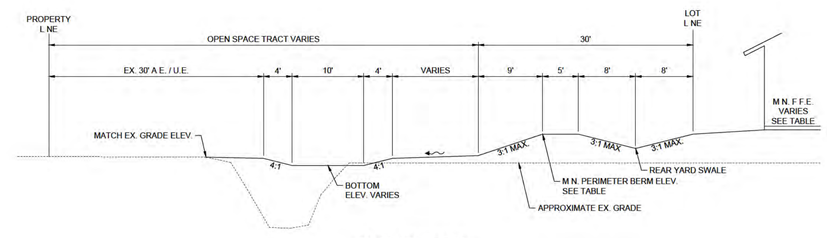

SECTION M-M
NTS

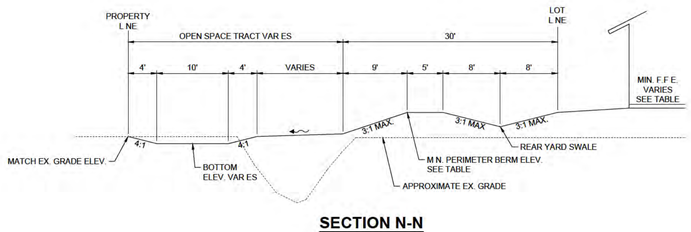

SECTION N-N
NTS

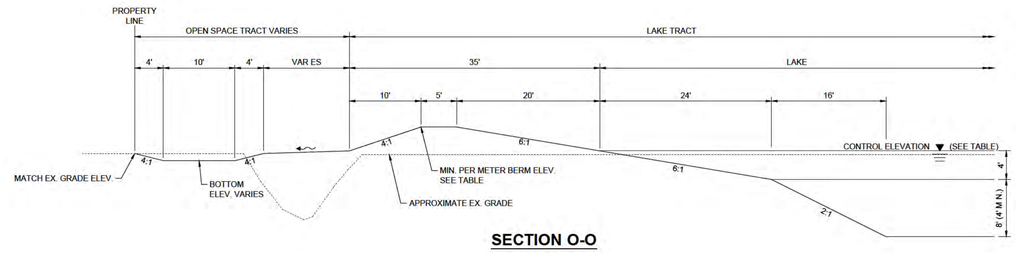

SECTION O-O
NTS

SURFACE WATER MANAGEMENT PARAMETERS

	BASIN 1	BASIN 2	BASIN 3	BASIN 4	BASIN 5	BASIN 6	BASIN 7	BASIN 8
CONTROL ELEVATION (FT-NAVD)	26.50	26.50	26.50	26.00	25.00	24.00	22.50	23.50
MINIMUM ROAD ELEVATION (FT-NAVD)	28.50	28.50	28.50	28.25	27.00	26.00	24.50	25.50
MINIMUM BERM ELEVATION (FT-NAVD)	29.00	29.50	29.00	29.00	27.75	26.50	24.75	25.75
MINIMUM FINISHED FLOOR ELEVATION (FT-NAVD)	29.50	29.50	29.75	29.00	28.00	27.00	25.50	26.50

DELISI FITZGERALD, INC.
Planning - Engineering - Project Management
1605 Hendry Street
Fort Myers, FL 33901
239-418-0691 • 239-418-0692 fax
Florida Certificate of Authorization: Engineering LB #: 26978

ENGINEER OF RECORD:
ANDREW D. FITZGERALD, P.E. (FOR THE FIRM)
FLORIDA P.E. NO. 56776

NOT VALID WITHOUT SEAL, SIGNATURE AND DATE

OWNER / DEVELOPER:
PAN TERRA HOLDINGS, LTD
150 ALHAMBRA CIRCLE, #925
CORAL GABLES, FL 33134

PROJECT:
VERDANA

PLAN REVISIONS

#	DATE	DESCRIPTION

TYPICAL SECTIONS

Project Manager:	ADF
Drawn By:	CAS
Checked By:	ADF
Project Number:	21375
Part of Section(s):	29,31,32
Township: 46 S	Range: 27 E
County, State:	LEE COUNTY, FL

Status:
FOR PERMITTING PURPOSES ONLY
NOT FOR CONSTRUCTION

Sheet Number: 24

K:\21375 - CORKSCREW GROVE\SER\PPLAN SET\21375-24-SECTIONS.DWG
9/29/2016 4:46 PM

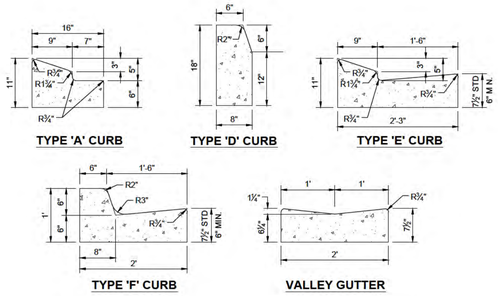

NOTES:

1. CONCRETE SHALL HAVE A COMPRESSIVE STRENGTH OF 3000 PSI IN 28 DAYS UNLESS OTHERWISE NOTED.
2. CURB SHALL BE CONSTRUCTED IN ACCORDANCE WITH FDOT INDEX 300.
3. CURB SHALL HAVE EXPANSION JOINTS INSTALLED AT ALL INLETS AND EVERY 500'±.

CURB DETAILS

NTS

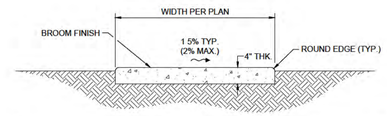

NOTES:

1. SIDEWALK SHALL BE CONSTRUCTED IN CONFORMANCE WITH FDOT STANDARD INDEX 310 AND STANDARD SPECIFICATION 522 AND CORRESPONDING STANDARDS.
2. COMPACT FILL AREAS TO MINIMUM 95% OF AASHTO T99 DENSITY.
3. SIDEWALK SHALL HAVE CONTRACTION JOINTS SPACED EQUALLY TO THE SIDEWALK WIDTH AND HAVE EXPANSION JOINTS EVERY 120' MAXIMUM.
4. CONCRETE SHALL HAVE A COMPRESSIVE STRENGTH OF 3000 PSI IN 28 DAYS.
5. SIDEWALKS SHALL HAVE A MAXIMUM RUNNING SLOPE OF 1:20 (5%) AND A MAXIMUM CROSS SLOPE OF 1:50 (2%) PER ADA STANDARDS FOR ACCESSIBLE DESIGN SECTION 4.3.
6. CURB RAMPS SHALL BE CONSTRUCTED IN CONFORMANCE WITH ADA STANDARDS FOR ACCESSIBLE DESIGN SECTION 4.7 AND FDOT STANDARD INDEX 304.

TYPICAL CONCRETE SIDEWALK DETAIL

NTS

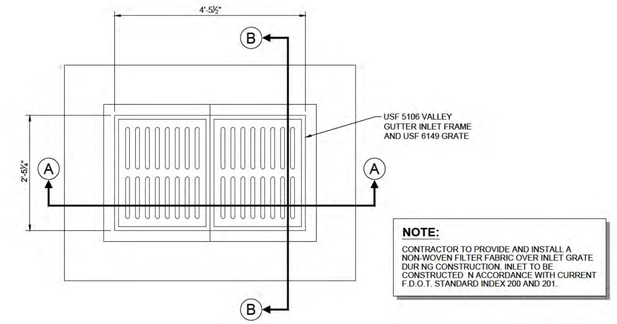

NOTE:

CONTRACTOR TO PROVIDE AND INSTALL A NON-WOVEN FILTER FABRIC OVER INLET GRATE DURING CONSTRUCTION. INLET TO BE CONSTRUCTED IN ACCORDANCE WITH CURRENT F.D.O.T. STANDARD INDEX 200 AND 201.

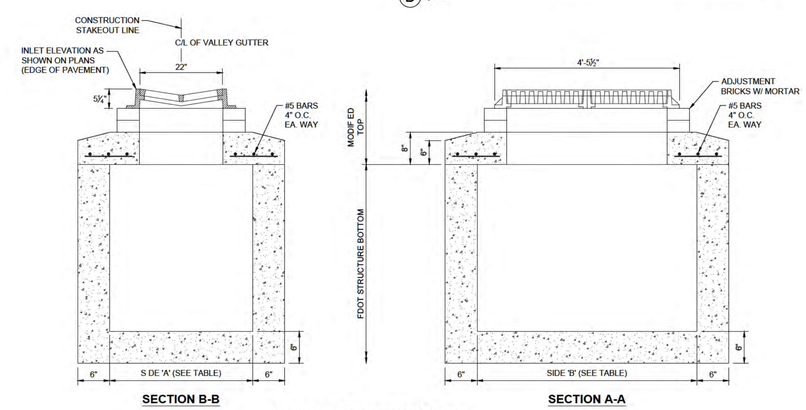

SECTION B-B

SECTION A-A

VALLEY GUTTER INLET

N.T.S.

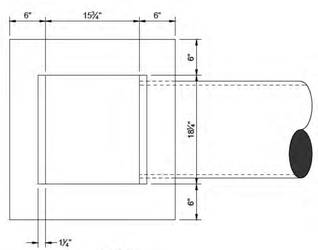

PLAN

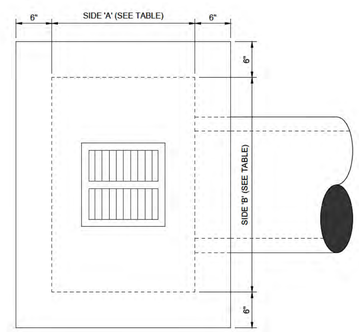

PLAN

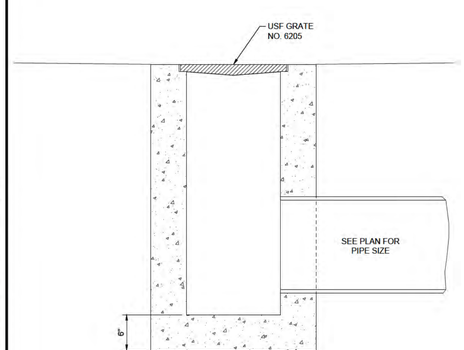

SECTION

TYPE 'X' INLET

NTS

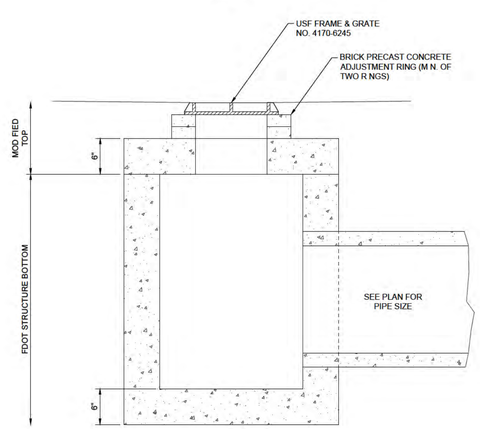

SECTION

MODIFIED FDOT GRATE INLET

NTS

DRAINAGE STRUCTURE TABLE

DRAINAGE STRUCTURE	REFERENCE DETAIL
TYPE 'C' INLET	FDOT INDEX 232
TYPE 'D' INLET	FDOT INDEX 232
TYPE 'E' INLET	FDOT INDEX 232
TYPE 'H' INLET (2 & 3 GRATE)	FDOT INDEX 232
TYPE 'H' INLET (4 GRATE)	FDOT INDEX 232
JUNCTION BOX	FDOT INDEX 200, 201
TYPE '1, 2, 3 AND 4' INLET	FDOT INDEX 200, 210
TYPE '5 AND 6' INLET	FDOT INDEX 200, 211
TYPE '9' INLET	FDOT INDEX 200, 214
HEADWALL	FDOT INDEX 250
FLARED END	FDOT INDEX 270
MITERED END (CROSS)	FDOT INDEX 272
MITERED END (SIDE)	FDOT INDEX 273

RECOMMENDED PIPE SIZES FOR STRUCTURES

DRAINAGE STRUCTURE	SIDE 'A' RECOMMENDED MAX. PIPE SIZE (INTERIOR WALL WIDTH)	SIDE 'B' RECOMMENDED MAX. PIPE SIZE (INTERIOR WALL WIDTH)
TYPE 'C' INLET	18" (2'-0")	24" (3'-1")
TYPE 'D' INLET	24" (3'-1")	36" (4'-1")
TYPE 'E' INLET	24" (3'-0")	36" (4'-6")
TYPE 'H' INLET (2 & 3 GRATE)	24" (3'-0")	60" OR 2-24" (6'-7")
TYPE 'H' INLET (4 GRATE)	24" (3'-0")	78" OR 2-30" (8'-9")
TYPE 'P' BOTTOM (RECTANGULAR)	30" (3'-6" MAX.)	30" (3'-6" MAX.)
TYPE 'J' BOTTOM (RECTANGULAR)	36" OR GREATER (VARIES)	36" OR GREATER (VARIES)

STRUCTURE DESIGN INFORMATION:

1. STRUCTURAL DESIGN AND REINFORCING SHALL CONFORM TO FDOT DESIGN STANDARDS.
2. ALL CONCRETE SHALL HAVE COMPRESSION STRENGTH OF 3,000 PSI @ 28 DAYS.

K:\21375 - CORKSCREW GROVE\SE\RP\PLAN SET\21375-25-DETA LS.DWG
9/29/2016 4:46 PM

DELISI FITZGERALD, INC.
Planning - Engineering - Project Management
1605 Hendry Street
Fort Myers, FL 33901
239-418-0691 • 239-418-0692 fax
Florida Certificate of Authorization: Engineering LB #: 26978

ENGINEER OF RECORD:
ANDREW D. FITZGERALD, P.E. (FOR THE FIRM)
FLORIDA P.E. NO. 56776

NOT VALID WITHOUT SEAL, SIGNATURE AND DATE

OWNER / DEVELOPER:
PAN TERRA HOLDINGS, LTD
150 ALHAMBRA CIRCLE, #925
CORAL GABLES, FL 33134

PROJECT:
VERDANA

PLAN REVISIONS

#	DATE	DESCRIPTION

DETAILS

Project Manager:	ADF
Drawn By:	CAS
Checked By:	ADF
Project Number:	21375
Part of Section(s):	29,31,32
Township: 46 S	Range: 27 E
County, State:	LEE COUNTY, FL

Status:
FOR PERMITTING PURPOSES ONLY
NOT FOR CONSTRUCTION

Sheet Number: 25

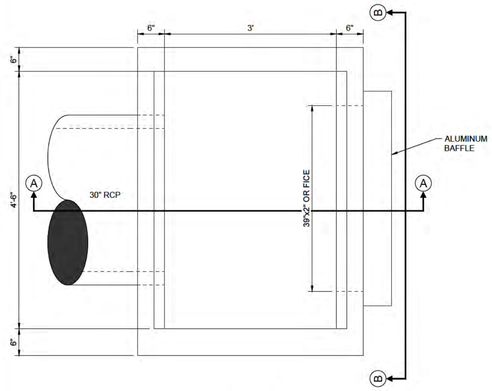

PLAN

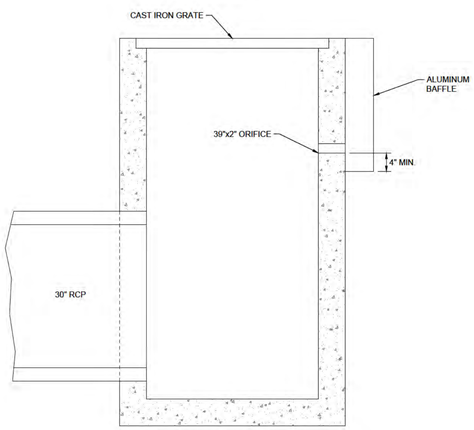

SECTION A-A

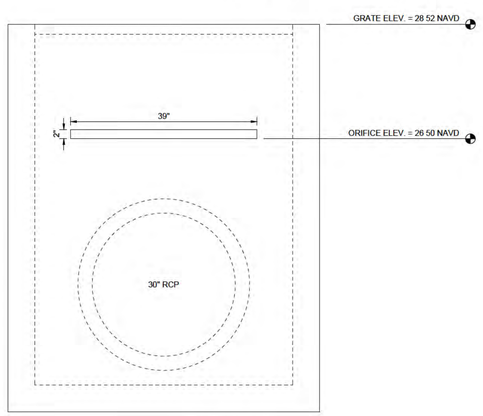

SECTION B-B

CS-1
MODIFIED FDOT TYPE 'E' INLET
NTS

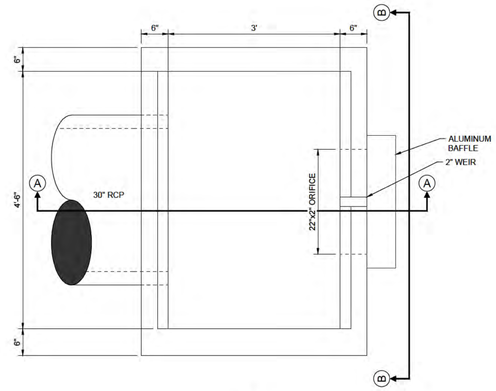

PLAN

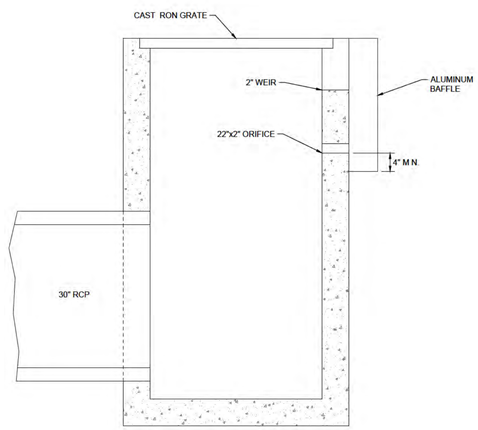

SECTION A-A

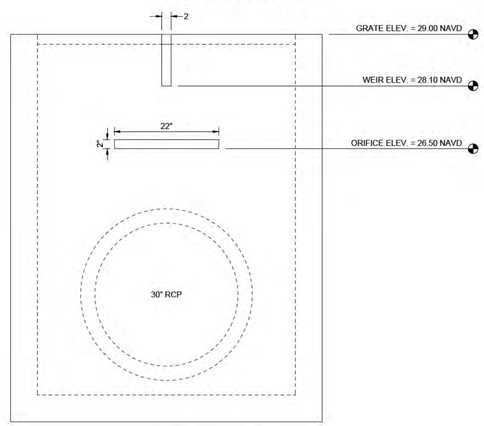

SECTION B-B

CS-2
MODIFIED FDOT TYPE 'E' INLET
NTS

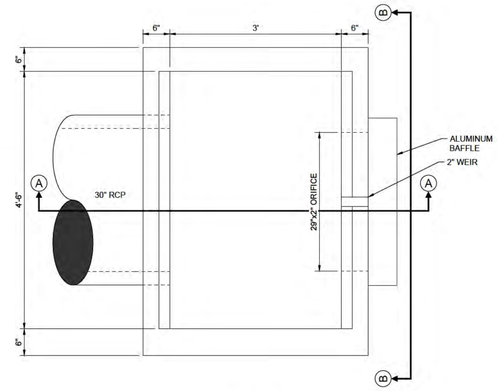

PLAN

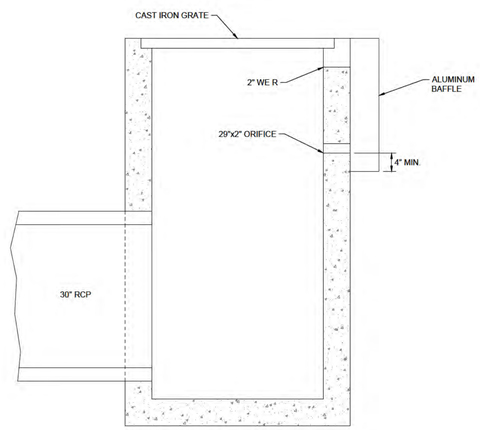

SECTION A-A

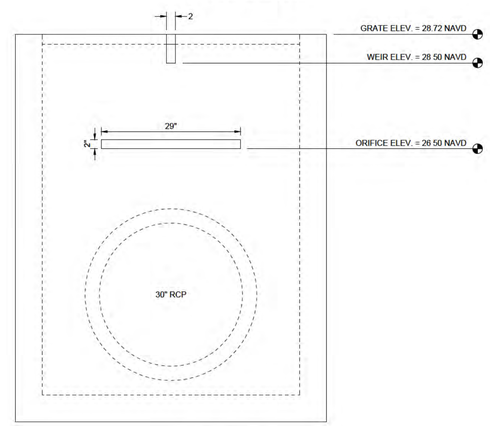

SECTION B-B

CS-3
MODIFIED FDOT TYPE 'E' INLET
NTS

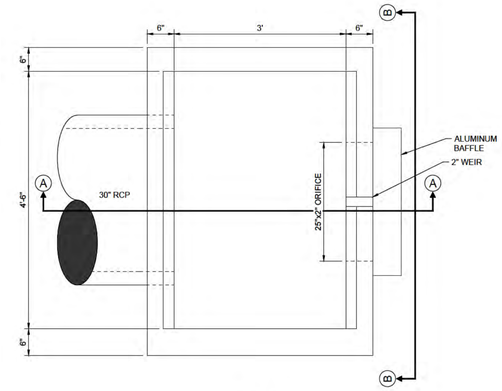

PLAN

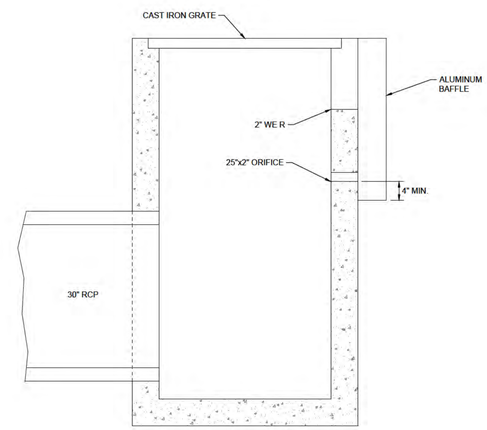

SECTION A-A

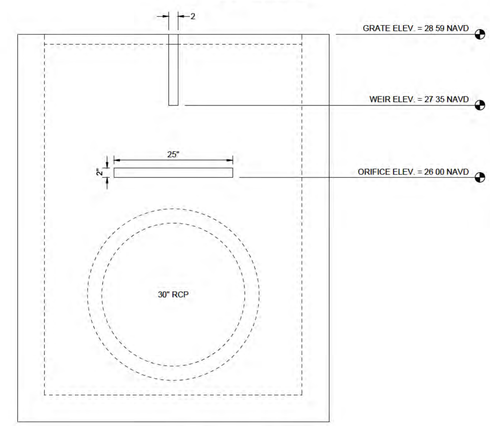

SECTION B-B

CS-4
MODIFIED FDOT TYPE 'E' INLET
NTS

K:\21375 - CORKSCREW GROVES\ERP\PLAN SET\21375-26-CONT-STRUC-A.DWG
9/29/2016 4:47 PM

DELISI FITZGERALD, INC.
Planning - Engineering - Project Management
1605 Hendry Street
Fort Myers, FL 33901
239-418-0651 • 239-418-0692 fax
Florida Certificate of Authorization:
Engineering LB # 26978

ENGINEER OF RECORD:
ANDREW D. FITZGERALD, P.E. (FOR THE FIRM)
FLORIDA P.E. NO. 56776

NOT VALID WITHOUT SEAL, SIGNATURE AND DATE

OWNER / DEVELOPER:
PAN TERRA HOLDINGS, LTD
150 ALHAMBRA CIRCLE #925
CORAL GABLES, FL 33134

PROJECT:
VERDANA

PLAN REVISIONS

#	DATE	DESCRIPTION

CONTROL STRUCTURE DETAILS

Project Manager:	ADF
Drawn By:	CAS
Checked By:	ADF
Project Number:	21375
Part of Section(s):	29,31,32
Township: 46 S	Range: 27 E
County, State:	LEE COUNTY, FL

Status:
FOR PERMITTING PURPOSES ONLY
NOT FOR CONSTRUCTION

Sheet Number: 26

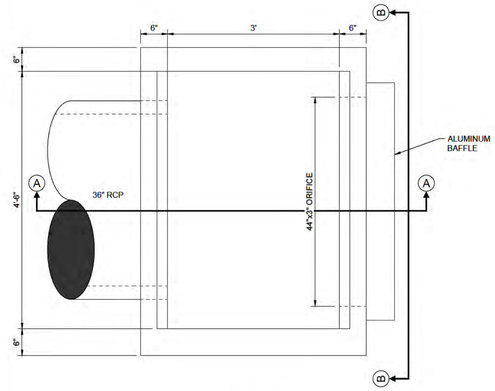

PLAN

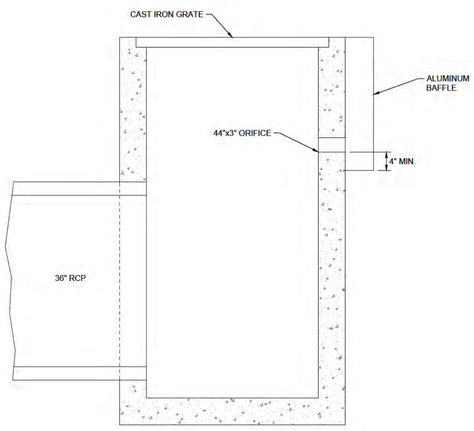

SECTION A-A

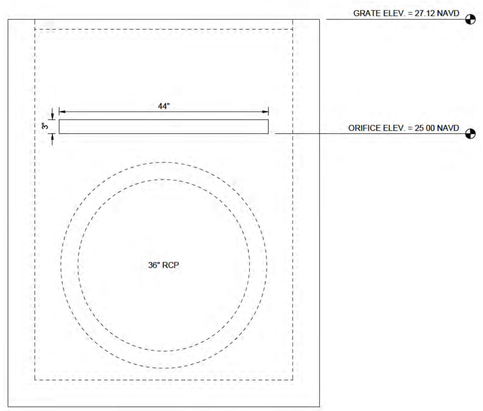

SECTION B-B

CS-5
MODIFIED FDOT TYPE 'E' INLET
NTS

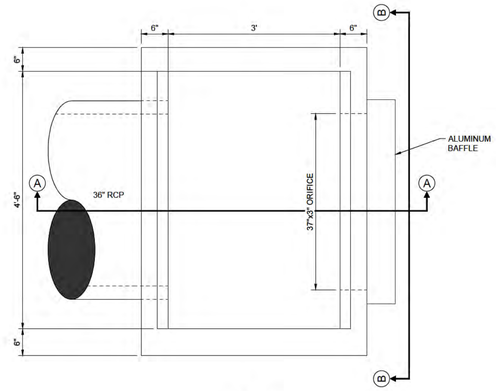

PLAN

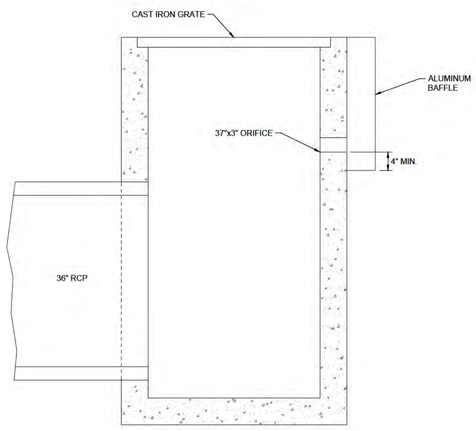

SECTION A-A

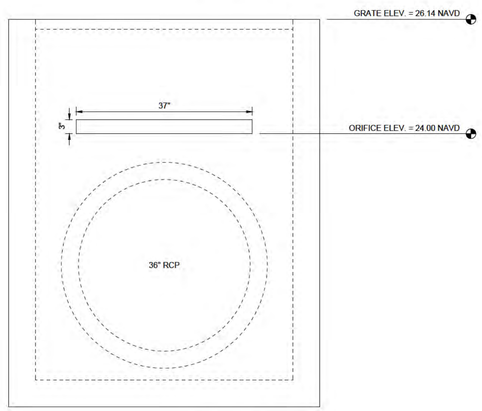

SECTION B-B

CS-6
MODIFIED FDOT TYPE 'E' INLET
NTS

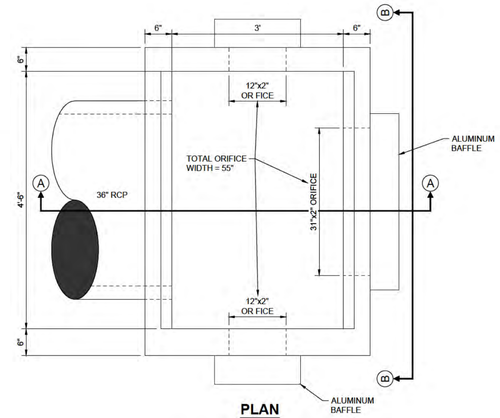

PLAN

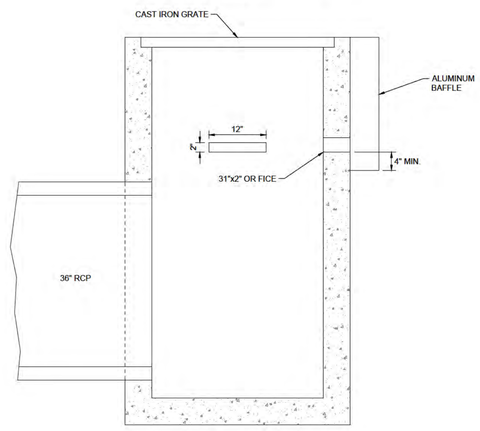

SECTION A-A

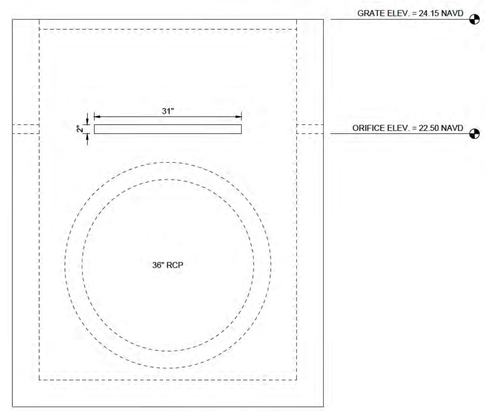

SECTION B-B

CS-7
MODIFIED FDOT TYPE 'E' INLET
NTS

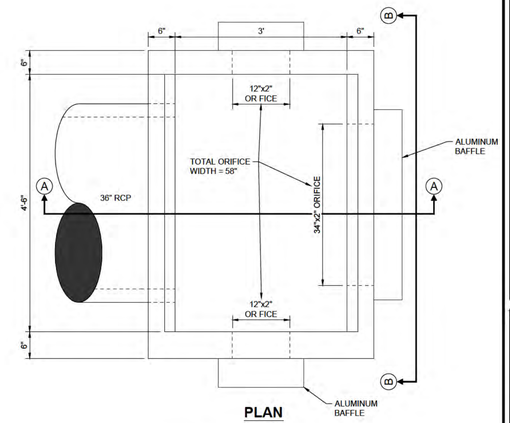

PLAN

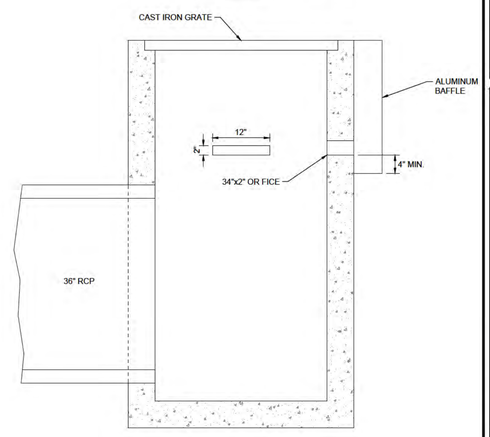

SECTION A-A

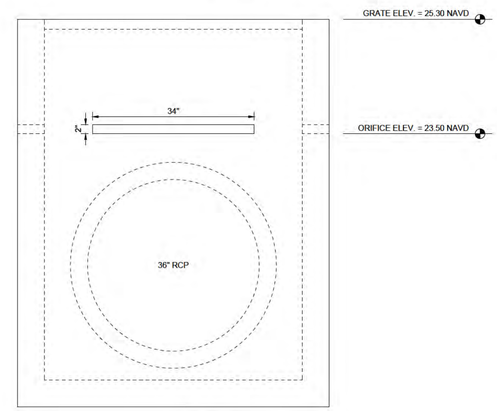

SECTION B-B

CS-8
MODIFIED FDOT TYPE 'E' INLET
NTS

K:\21375 - CORKSCREW GROVE\SIE\PP\PLAN SET\21375-27-CONT-STRUC-B.DWG
9/29/2016 4:47 PM

DELISI FITZGERALD, INC.
Planning - Engineering - Project Management
1605 Hendry Street
Fort Myers, FL 33901
239-418-0691 • 239-418-0692 fax
Florida Certificate of Authorization:
Engineering LB # 26978

ENGINEER OF RECORD:
ANDREW D. FITZGERALD, P.E. (FOR THE FIRM)
FLORIDA P.E. NO. 56776

NOT VALID WITHOUT SEAL, SIGNATURE AND DATE

OWNER / DEVELOPER:
PAN TERRA HOLDINGS, LTD
150 ALHAMBRA CIRCLE, #925
CORAL GABLES, FL 33134

PROJECT:
VERDANA

PLAN REVISIONS

#	DATE	DESCRIPTION

CONTROL STRUCTURE DETAILS

Project Manager:	ADF
Drawn By:	CAS
Checked By:	ADF
Project Number:	21375
Part of Section(s):	29,31,32
Township: 46 S	Range: 27 E
County, State:	LEE COUNTY, FL

Status:
FOR PERMITTING PURPOSES ONLY
NOT FOR CONSTRUCTION

Sheet Number: 27

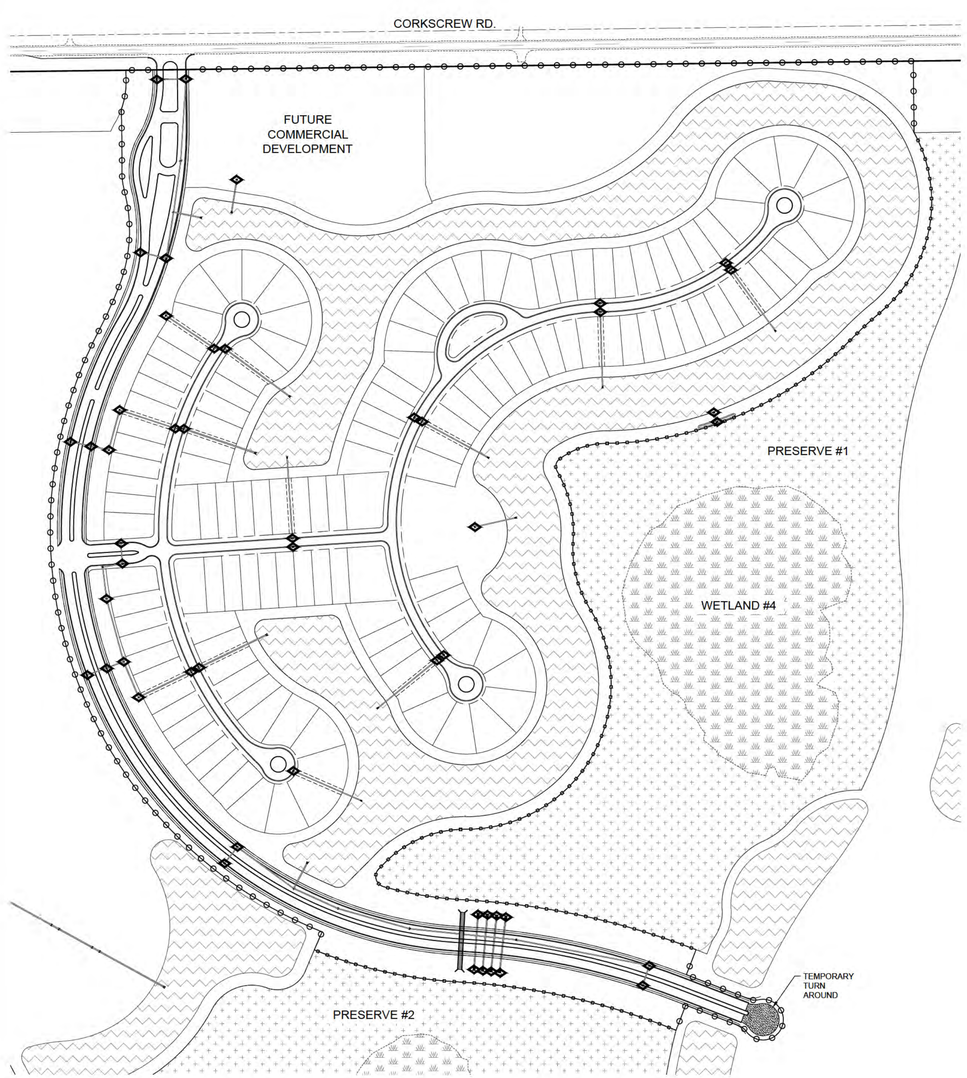

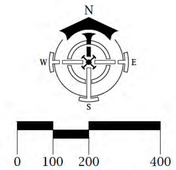

LEGEND

- INLET PROTECTION WITH MIRAFI FABRIC, STAKED SILT FENCE OR BY OTHER APPROVED METHODS AND DEVICES
- STAKED SILT FENCE
- DOUBLE ROW STAKED S LT FENCE (ADJACENT TO ALL PRESERVE AREAS)

EROSION CONTROL NOTES:

1. THESE DETAILS REPRESENT TYPICAL BEST MANAGEMENT PRACTICES FOR SOIL EROSION CONTROL.
2. PRIOR TO COMMENCEMENT OF CONSTRUCTION ACTIVITY APPROPRIATE EROSION CONTROL DEVICES SHALL BE INSTALLED TO CONTROL AND REDUCE SOIL EROSION AND SED MENT TRANSPORT TO OFF SITE AREAS. THE CONTRACTOR SHALL MA NTAIN THESE DEVICES THROUGHOUT THE DURATION OF CONSTRUCTION. ALL DEVICES SHALL REMAIN IN PLACE UNT L PERMANENT EROSION CONTROL IS ESTABLISHED.
3. AREAS LOCATED ADJACENT TO UNDEVELOPED AREAS SHALL BE STABILIZED WITH SOD IMMEDIATELY UPON REACHING FINAL GRADE.
4. THE CONTRACTOR SHALL SUPPLEMENT THIS PLAN AS MAY BE REQUIRED TO CONTROL AND REDUCE SOIL EROSION BASED ON THE CONTRACTORS MEANS, METHODS AND TECHNIQUE OF CONSTRUCTION. THE CONTRACTOR SHALL ALSO FILE A NPDES NOTICE OF INTENT WITH THE EPA AND LEE COUNTY DEVELOPMENT SERVICE DIVISION AT LEAST 48 HOURS PRIOR TO THE START OF CONSTRUCTION.
5. DURING CONSTRUCTION, ALL INLET OPEN NGS SHALL BE COVERED WITH FILTER FABRIC (MIRAFI 140N, OR APPROVED EQUAL) TO PREVENT DEBRIS FROM FALLING NTO THE INLET. F LTER FABRIC TO BE REMOVED FROM ALL INLETS IMMEDIATELY UPON PROPER STABILIZATION OF CONSTRUCTED IMPROVEMENTS.

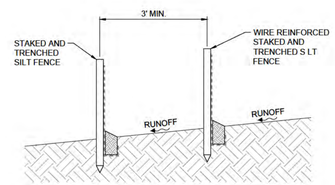

DOUBLE ROW SILT FENCE DETAIL
NTS

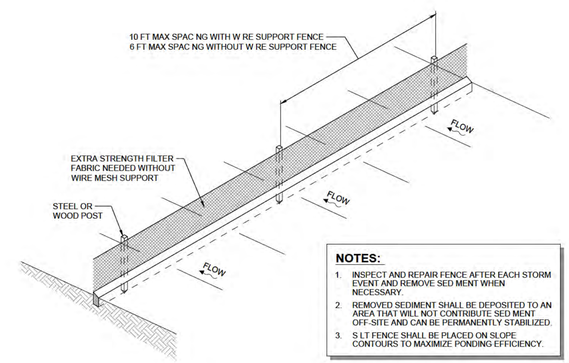

NOTES:

1. INSPECT AND REPAIR FENCE AFTER EACH STORM EVENT AND REMOVE SED MENT WHEN NECESSARY.
2. REMOVED SEDIMENT SHALL BE DEPOSITED TO AN AREA THAT WILL NOT CONTRIBUTE SED MENT OFF-SITE AND CAN BE PERMANENTLY STABILIZED.
3. S LT FENCE SHALL BE PLACED ON SLOPE CONTOURS TO MAXIMIZE PONDING EFFICIENCY.

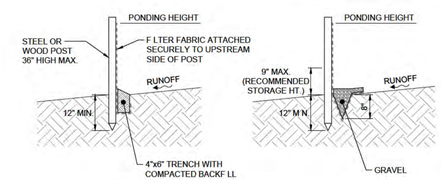

STANDARD DETAIL
TRENCH WITH NATIVE BACKF LL

ALTERNATE DETAIL
TRENCH WITH GRAVEL

SILT FENCE DETAIL
NTS

DeLisi Fitzgerald, Inc.
Planning - Engineering - Project Management
1605 Hendry Street
Fort Myers, FL 33901
239-418-0691 • 239-418-0692 fax
Florida Certificate of Authorization:
Engineering LB # :26978

ENGINEER OF RECORD:
ANDREW D. FITZGERALD, P.E. (FOR THE FIRM)
FLORIDA P.E. NO. 56776

NOT VALID WITHOUT SEAL, SIGNATURE AND DATE

OWNER / DEVELOPER:
PAN TERRA HOLDINGS, LTD
150 ALHAMBRA CIRCLE #925
CORAL GABLES, FL 33134

PROJECT:
VERDANA

PLAN REVISIONS

#	DATE	DESCRIPTION

EROSION CONTROL PLAN

Project Manager:	ADF
Drawn By:	CAS
Checked By:	ADF
Project Number:	21375
Part of Section(s):	29,31,32
Township: 46 S	Range: 27 E
County, State:	LEE COUNTY, Fl.

Status:
FOR PERMITTING PURPOSES ONLY
NOT FOR CONSTRUCTION

Sheet Number: 28

K:\21375 - CORKSCREW GROVE\SERP\PLAN SET\21375-28-EROSION.DWG
9/29/2016 4:48 PM